USB DVI HDBaseT 2.0 KVM Extender
CE620

User Manual

www.aten.com

EMC Information

FEDERAL COMMUNICATIONS COMMISSION INTERFERENCE STATEMENT: This equipment has been tested and found to comply with the limits for a Class A digital device, pursuant to Part 15 of the FCC Rules. These limits are designed to provide reasonable protection against harmful interference when the equipment is operated in a commercial environment. This equipment generates, uses, and can radiate radio frequency energy and, if not installed and used in accordance with the instruction manual, may cause harmful interference to radio communications. Operation of this equipment in a residential area is likely to cause harmful interference in which case the user will be required to correct the interference at his own expense.

The device complies with Part 15 of the FCC Rules. Operation is subject to the following two conditions: (1) this device may not cause harmful interference, and (2) this device must accept any interference received, including interference that may cause undesired operation.

FCC Caution: Any changes or modifications not expressly approved by the party responsible for compliance could void the user's authority to operate this equipment.

Warning: This equipment is compliant with Class A of CISPR 32. In a residential environment, this equipment may cause radio interference.

Suggestion: Shielded twisted pair (STP) cables must be used with the unit to ensure compliance with FCC & CE standards.

KCC Statement

유선 제품용 / A 급 기기 (업무용 방송 통신 기기)
이 기기는 업무용 (A 급) 전자파적합기기로서 판매자 또는 사용자는 이 점을 주의하시기 바라며 , 가정 외의 지역에서 사용하는 것을 목적으로 합니다 .

RoHS

This product is RoHS compliant.

User Information

Online Registration

Be sure to register your product at our online support center:

International	http://eservice.aten.com

Telephone Support

For telephone support, call this number:

International	886-2-8692-6959
China	86-400-810-0-810
Japan	81-3-5615-5811
Korea	82-2-467-6789
North America	1-888-999-ATEN ext 4988 1-949-428-1111

User Notice

All information, documentation, and specifications contained in this manual are subject to change without prior notification by the manufacturer. The manufacturer makes no representations or warranties, either expressed or implied, with respect to the contents hereof and specifically disclaims any warranties as to merchantability or fitness for any particular purpose. Any of the manufacturer's software described in this manual is sold or licensed *as is*. Should the programs prove defective following their purchase, the buyer (and not the manufacturer, its distributor, or its dealer), assumes the entire cost of all necessary servicing, repair and any incidental or consequential damages resulting from any defect in the software.

The manufacturer of this system is not responsible for any radio and/or TV interference caused by unauthorized modifications to this device. It is the responsibility of the user to correct such interference.

The manufacturer is not responsible for any damage incurred in the operation of this system if the correct operational voltage setting was not selected prior to operation. PLEASE VERIFY THAT THE VOLTAGE SETTING IS CORRECT BEFORE USE.

Package Contents

The CE620 package consists of:

- 1 CE620L USB DVI HDBaseT 2.0 KVM Extender (Local Unit)
- 1 CE620R USB DVI HDBaseT 2.0 KVM Extender (Remote Unit)
- 1 Custom DVI KVM Cable Set
- 2 Power Adapters
- 2 Mounting Kits
- 8 Foot Pads
- 1 User Instructions*

Check to make sure that all the components are present and that nothing got damaged in shipping. If you encounter a problem, contact your dealer.

Read this manual thoroughly and follow the installation and operation procedures carefully to prevent any damage to the unit, and/or any of the devices connected to it.

* Features may have been added to the CE620 since this manual was published. Please visit our website to download the most up-to-date version of the manual.

© Copyright 2019 ATEN® International Co., Ltd.
Manual Date: 2019-05-14

ATEN and the ATEN logo are registered trademarks of ATEN International Co., Ltd. All rights reserved.
All other brand names and trademarks are the registered property of their respective owners.

Contents

EMC Information ii
RoHS. ii
User Information iii
Online Registration iii
Telephone Support iii
User Notice iii
Package Contents iv
About this Manual vii
Conventions viii
Product Information. viii

1. Introduction

Overview 1
Features 2
Requirements 3
Consoles 3
Computers. 3
Cables 3
Maximum Cable Distances 3
Components 4
CE620L (Local Unit) Front and Rear View 4
CE620R (Remote Unit) Front and Rear View 5

2. Hardware Setup

Stacking and Rack Mounting 7
Stacking. 7
Rack Mounting 8
Installation 9
Grounding 9
Setting Up 10
Installation Diagram 11

3. Operation

Overview 13
LED Display. 13
Long Reach Mode 13

Appendix

Safety Instructions. 15
General 15
Mounting 17
Technical Support 18
International 18

North America 18
Specifications 19
Limited Warranty. 20

About this Manual

This User Manual is provided to help you get the most from your system. It covers all aspects of installation, configuration and operation. An overview of the information found in the manual is provided below.

Chapter 1, Introduction, introduces you to the CE620 system. Its purpose, features and benefits are presented, and its front and back panel components are described.

Chapter 2, Hardware Setup, describes the steps that are necessary to quickly and safely set up your installation.

Chapter 3, Operation, explains the fundamental concepts involved in operating the CE620

An Appendix, provides specifications and other technical information regarding the CE620.

Conventions

This manual uses the following conventions:

`Monospaced`	Indicates text that you should key in.
[ ]	Indicates keys you should press. For example, [Enter] means to press the **Enter** key. If keys need to be chorded, they appear together in the same bracket with a plus sign between them: [Ctrl+Alt].
1.	Numbered lists represent procedures with sequential steps.
♦	Bullet lists provide information, but do not involve sequential steps.
→	Indicates selecting the option (on a menu or dialog box, for example), that comes next. For example, Start → Run means to open the *Start* menu, and then select *Run*.
⚠	Indicates critical information.

Product Information

For information about all ATEN products and how they can help you connect without limits, visit ATEN on the Web or contact an ATEN Authorized Reseller. Visit ATEN on the Web for a list of locations and telephone numbers:

International	http://www.aten.com
North America	http://www.aten-usa.com

Chapter 1
Introduction

Overview

The ATEN CE620 USB DVI HDBaseT 2.0 KVM Extender integrates the latetst HDBaseT 2.0 technologies to provide the most reliable transmission of video, audio, USB and RS-232 signals available on the market. Featured with a Long Reach mode, the CE620 delivers high-quality DVI video, PCM 2-channel digital audio, USB 2.0, and RS-232 signals up to 150 meters using a single Cat6/6a/ATEN 2L-2910 Cat 6 cable. Signal detection LED to indicate the HDBaseT connection status on the remote unit

The CE620 is equipped with USB connectors which allow you to extend any USB device between the units. The USB functionality provides support for peripheral sharing, touch panel control and file transfers. CE620 allows access to a computer system from a remote console (USB keyboard, monitor, and mouse). Because it allows access to a computer system from a remote console, the CE620 is perfect for use in any type of installation where you need to place the console where it is conveniently accessible, but you want the system equipment to reside in a safe location – away from the dust and dirt of the factory floor, or the harsh environmental influence of a construction site, for example. This allows users to deploy system equipment over large distances.

The CE620 is useful for control and security purposes, where you can have the system in a secure area with the console in the most convenient location for user access. This is ideal for managing highly confidential data systems.

The CE620 improves on previous designs by using inexpensive Cat 5e/6a cable instead of bulkier, more expensive, standard DVI cables, for a much neater, more convenient, and reliable connection and utilizing HDBaseT 2.0 technology. The CE620 ensures superior video quality with 1920 x 1200 (1080p, 12 bit Deep Color) resolutions so that you get the most out of your DVI displays.

With a simple cable installatioin supporting various signals, the CE620 is ideal for transportation centers, medical facilities, and shopping malls, industrial kiosks and for syncing files and folders between computers. Setup is as easy as can be – simply connect the computer; run the Cat 5e/6a cable up to 100 meters to the Remote Unit; and plug the remote console into the Remote Unit.

Features

- Uses a single Cat 5e cable to connect the local and remote units
- Allows extended access to a DVI computer or KVM installation from a remote console
- HDBaseT™ 2.0 connectivity technology
  - Extends video, audio, USB, and RS-232 signals via a single Ethernet cable
  - EDID Buffer for smooth power-up and the highest quality display
  - Enhanced bit error detection and correction to resist signal interference during high-quality video transmissions
- Long distance superior video quality
  - HDBaseT™ Standard mode up to 1920 x 1200 @ 100 m
  - HDBaseT™ Long Reach mode up to 1920 x 1080 @ 150 m
- Long Reach mode switch - swithes between HDBaseT™ Standard and Long Reach modes in a snap
- Supports wide screen formats
- Suports 2-channel PCM digital audio - ensuring high-quality audio transmissions
- RS-232 serial ports – connect to a serial terminal, or serial devices such as touch screens and barcode scanners
- 3 USB 2.0 ports for keyboard/mouse and peripherals
- Supports USB 2.0 signals and true plug-and play (no software or drivers required)*
- Built-in 8KV/15KV ESD protection (Contact voltage 8KV; Air voltage 15KV)
- Supports PC wakeup function via pushbutton or hotkey
- Easy Installation Rack Mounting Kit
- Firmware upgradeable

***Note:** The CE620 supports a maximum combined USB transfer rate of 30 Mbps for attached USB devices.

Requirements

Consoles

- A DVI-D monitor capable of the highest resolution you will be using on any computer in the installation.
- A USB keyboard
- A USB mouse

Computers

The following equipment must be installed on each computer that is to be connected to the system:

- A DVI-D / DVI-I port
- A USB port for the keyboard/mouse
- RS-232 Serial port (optional)
- Microphone and speaker ports (optional)

Cables

- For optimal signal integrity, and to simplify the layout, we strongly recommend that you use the high quality custom DVI Cable that is provided with this package.

For more information about using the correct Cat 5e/6 cable and setting up HDBaseT devices, you can download the ATEN HDBaseT Installation Guide:

http://assets.aten.com/resource/epublication/ATEN_HDBaseT_InstallationGuide.pdf

Maximum Cable Distances

Connection	Distance
Computer to Local Unit (CE620L)	1.8 m
Local Unit (CE620L) to Remote Unit (CE620R)	100 m
Remote Unit (CE620R) to monitor	5 m

Components

CE620L (Local Unit) Front and Rear View

Front View

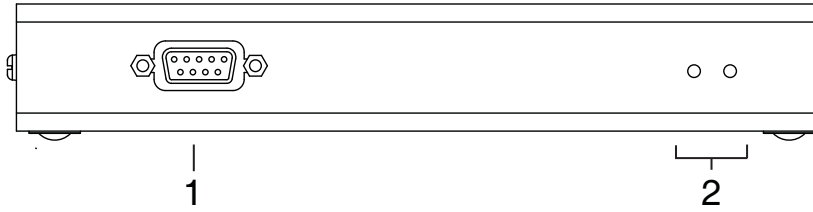

Rear View

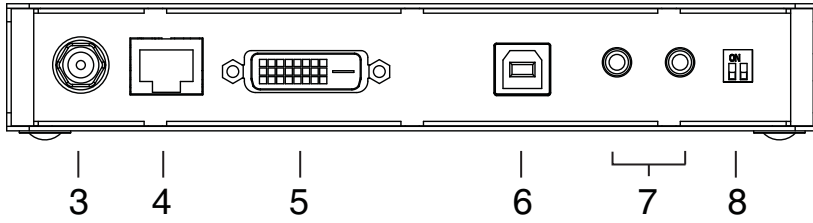

No.	Component	Description
1	RS-232 Port	This RS-232 serial port is for connecting to a serial terminal for configuration.
2	LEDs	The CE620L has two LEDs to indicate operating status Link and Power (see page 13 for more information).
3	Power Jack	The cable from the Power adapter connects here.
4	HDBaseT Out Port	The Cat 5e/6a cable that connects the Local and Remote Units plugs in here.
5	DVI-D Input Port	Connect a DVI cable from a computer to this port.
6	USB Type B Port	The USB cable from your computer or USB hub plugs in here.
7	Audio Ports	These mini stereo ports are for the speakers (green) and microphone (pink).
8	Firmware Upgrade / Long Reach / Normal Switch	These 2-segment switches allow you to put the unit in Firmware Upgrade*, Long Reach and Normal mode. **Note:** The firmware upgrade mode is reserved for technical support. To upgrade the device's firmware, please contact ATEN customer support.

CE620R (Remote Unit) Front and Rear View

Front View

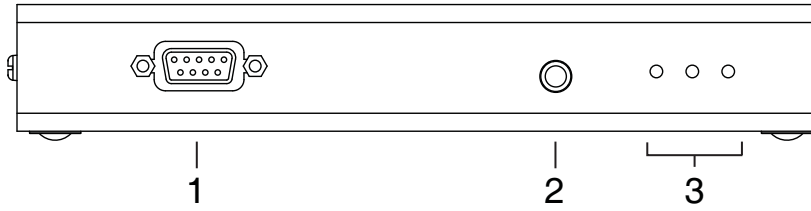

Rear View

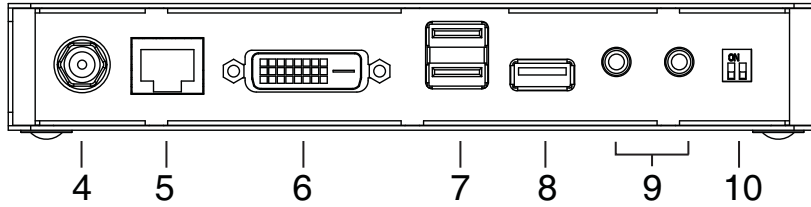

No.	Component	Description
1	RS-232 Port	This RS-232 serial port is for connecting to a serial terminal for configuration.
2	Wakeup PC Pushbutton	Press this button if you are at the remote console's location and you want to wake the computer on the local side.
3	LEDs	The CE620R has three LEDs to indicate operating status – Video Out, Link, and Power (see page 13 for more information).
4	Power Jack	The cable from the Power adapter connects here.
5	HDBaseT In Port	The Cat 5e/6a cable that connects the Local and Remote Units plugs in here.
6	DVI-D Output Port	Connect a DVI monitor to this port.
7	Console Ports	Plug the remote console's keyboard and mouse into these two USB ports.
8	USB Type A Ports	Your USB 2.0 devices plug in here.
9	Audio Ports	These mini stereo ports are for the speakers (green) and microphone (pink).

No.	Component	Description
10	Firmware Upgrade / Long Reach / Normal Switch	These 2-segment switches allow you to put the unit in Firmware Upgrade*, Long Reach, and Normal mode. **Note:** The firmware upgrade mode is reserved for technical support. To upgrade the device's firmware, please contact ATEN customer support.

Chapter 2
Hardware Setup

1. Important safety information regarding the placement of this device is provided on page 15. Please review it before proceeding.
2. Make sure that the power to all devices connected to the installation are turned off. You must unplug the power cords of any computers that have the Keyboard Power On function.

Stacking and Rack Mounting

Stacking

The CE620 can be placed on any appropriate level surface that can safely support its weight plus the weight of its attached cables. To place or stack the CE620, remove the backing material from the bottom of the rubber feet that came with this package, and stick them onto the switch's bottom panel at the corners, as shown in the diagram, below:

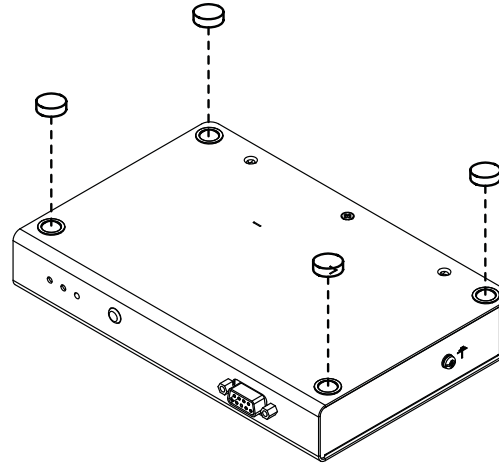

Rack Mounting

For convenience and flexibility, the CE620 can be mounted on system racks. To rack mount a unit do the following:

1. Using the screws provided in the Mounting Kit, screw the mounting bracket into the top or bottom of the unit as show in the diagram below:

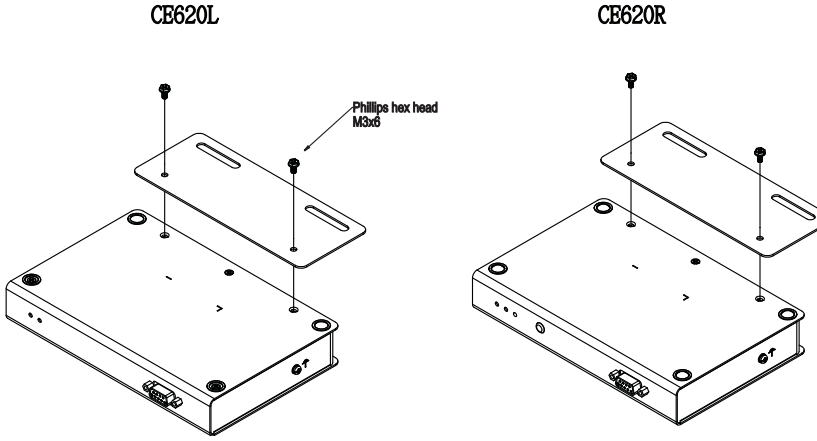

2. Screw the bracket into any convenient location on the rack.

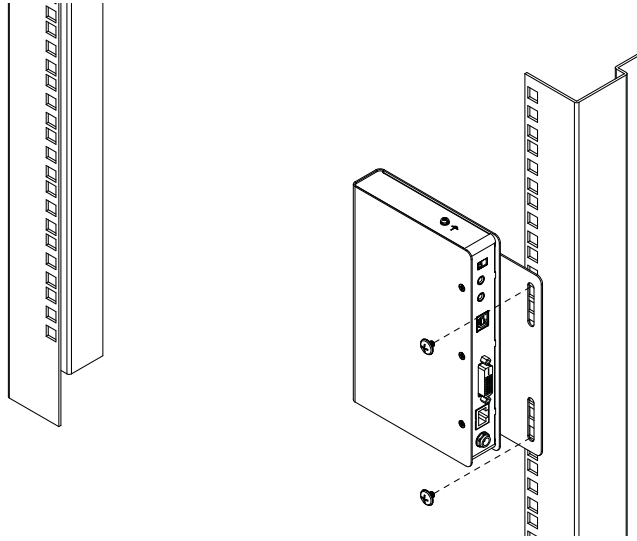

Note: These screws are not provided. We recommend that you use M5 x 12 Phillips Type I cross, recessed type screws.

Installation

Grounding

To prevent damage to your installation it is important that all devices are properly grounded.

1. Use a grounding wire to ground both units by connecting one end of the wire to the grounding terminal, and the other end of the wire to a suitable grounded object.

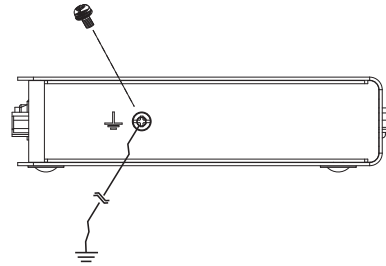

2. Make sure that the computer that the Local Unit connects to and the monitor that the Remote Unit connects to are properly grounded.

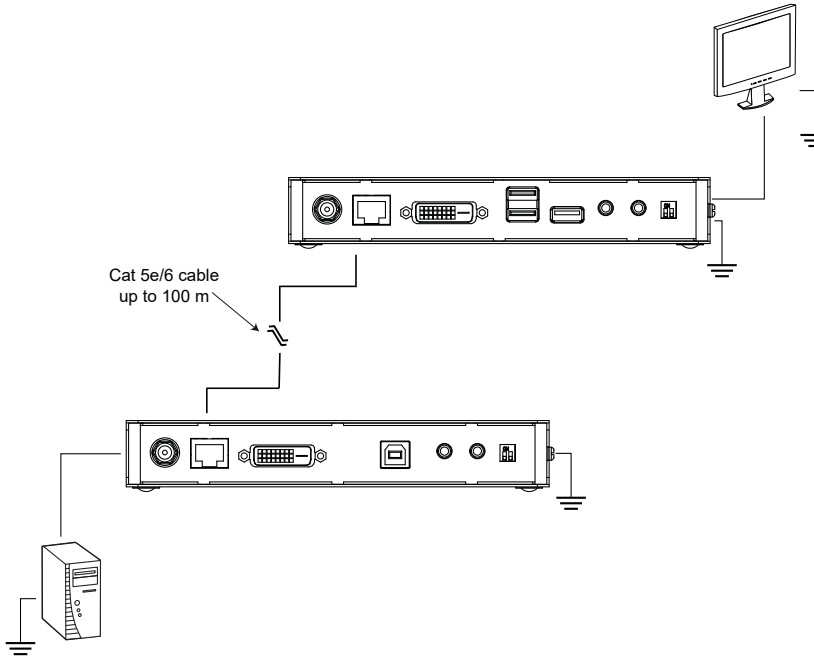

Setting Up

Setting up the CE620 USB DVI HDBaseT 2.0 KVM Extender system is simply a matter of plugging in the cables. Make sure that all the equipment to be connected are powered off. Refer to the installation diagram on the following page and do the following:

1. Connect the audio plug of the KVM cable set (supplied with this package) to the microphone/speaker ports located on the CE620L. Plug the other end of the cable into the microphone/speaker ports on the local computer.
2. Connect the USB connector of the KVM cable set (supplied with this package) to the USB Type B Port on the CE620L. Plug the other end of the cable into a USB Type A port on the local computer.
3. Connect the DVI-D cable of the KVM cable set (supplied with the package) to the DVI-D input Port located on the CE620L. Plug the other end of the cable into the DVI port on the local computer.
4. Plug either end of the Cat 5e/6 cable into the CE620L's HDBaseT Out Port. Plug the other end of the Cat 5e/6 cable into the HDBaseT In Port of the CE620R.
5. Plug one of the power adapters (supplied with this package) into a power source; plug the adapter's power cable into the CE620L's Power Jack.
6. Use a DVI cable to connect the DVI-D Output Port on the CE620R to your monitor.
7. Plug the cables from the remote USB devices (mouse, keyboard, etc.), into their respective USB Type A Ports on the CE620R.
8. Plug the cables from the microphone and speakers, into their respective audio ports on the CE620R.
9. Plug the second power adapter (supplied with this package) into a power source; plug the adapter's power cable into the CE620R's Power Jack.
10. (Optional) If you are installing a serial device, use an RS-232 cable to connect the local PC to the RS-232 Port located on the front of the CE620L.
11. (Optional) Connect a serial device to the RS-232 Port located on the front of the CE620R.
12. To extend video, RS-232 and USB signals up to 150 m with a resolution of 1080p, on the rear of both CE620 units set the Long Reach switch to ON (see page 13 for more information).

Installation Diagram

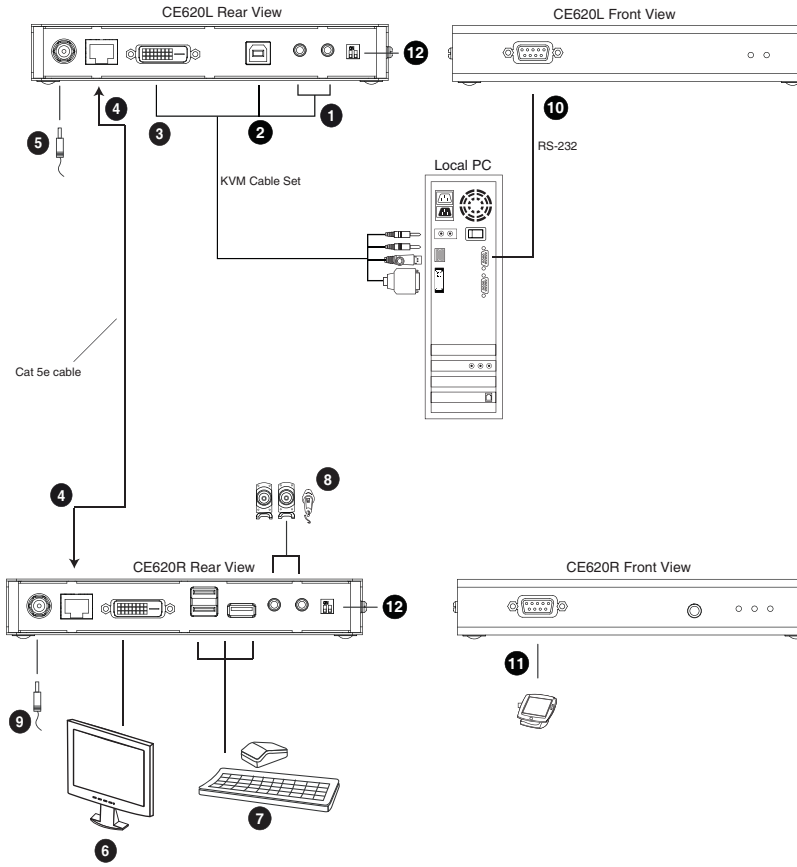

This Page Intentionally Left Blank

Chapter 3
Operation

Overview

The *Operation* chapter describes how the LED display lights work and how to use HDBaseT Long Reach Mode.

LED Display

The CE620 local and remote Units have front panel LEDs to indicate their operating status, as shown in the tables, following:

LED	Indication
Power	Lights (Green) steadily to indicate that the system is receiving power.
Link	◆ Lights (Orange) steadily to indicate that the connection to the Local and Remote units is OK. ◆ OFF when there is a problem with the connection. ◆ Flashing (Orange) indicates the HDBaseT transmission signal is unstable (CE620R only)
Video Out (CE620R only)	◆ Flashes (Orange) to indicate normal video activity. ◆ OFF indicates that there is no video activity.

Long Reach Mode

The Long Reach mode switch on the rear of the CE620 provides long-reach connectivity – up to 150 m – for resolutions up to 1080p. To use this feature, on the rear of the local or remote unit, set the Long Reach switch to ON.

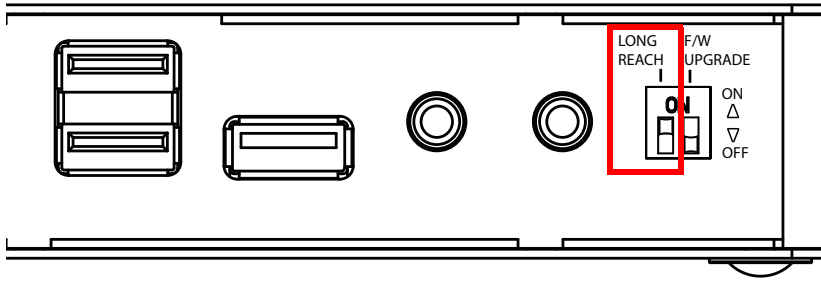

This Page Intentionally Left Blank

Appendix

Safety Instructions

General

- Read all of these instructions. Save them for future reference.
- Follow all warnings and instructions marked on the device.
- This product is for indoor use only.
- Do not place the device on any unstable surface (cart, stand, table, etc.). If the device falls, serious damage will result.
- Do not use the device near water.
- Do not place the device near, or over, radiators or heat registers.
- The device cabinet is provided with slots and openings to allow for adequate ventilation. To ensure reliable operation, and to protect against overheating, these openings must never be blocked or covered.
- The device should never be placed on a soft surface (bed, sofa, rug, etc.) as this will block its ventilation openings. Likewise, the device should not be placed in a built in enclosure unless adequate ventilation has been provided.
- Never spill liquid of any kind on the device.
- Unplug the device from the wall outlet before cleaning. Do not use liquid or aerosol cleaners. Use a damp cloth for cleaning.
- The device should be operated from the type of power source indicated on the marking label. If you are not sure of the type of power available, consult your dealer or local power company.
- The device is designed for IT power distribution systems with 230V phase-to-phase voltage.
- To prevent damage to your installation, it is important that all devices are properly grounded.
- The device is equipped with a 3-wire grounding type plug. This is a safety feature. If you are unable to insert the plug into the outlet, contact your electrician to replace your obsolete outlet. Do not attempt to defeat the purpose of the grounding-type plug. Always follow your local/national wiring codes.
- Do not allow anything to rest on the power cord or cables. Route the power cord and cables so that they cannot be stepped on or tripped over.

- If an extension cord is used with this device make sure that the total of the ampere ratings of all products used on this cord does not exceed the extension cord ampere rating. Make sure that the total of all products plugged into the wall outlet does not exceed 15 amperes.
- To help protect your system from sudden, transient increases and decreases in electrical power, use a surge suppressor, line conditioner, or un-interruptible power supply (UPS).
- Position system cables and power cables carefully; Be sure that nothing rests on any cables.
- Never push objects of any kind into or through cabinet slots. They may touch dangerous voltage points or short out parts resulting in a risk of fire or electrical shock.
- Do not attempt to service the device yourself. Refer all servicing to qualified service personnel.
- If the following conditions occur, unplug the device from the wall outlet and bring it to qualified service personnel for repair.
  - The power cord or plug has become damaged or frayed.
  - Liquid has been spilled into the device.
  - The device has been exposed to rain or water.
  - The device has been dropped, or the cabinet has been damaged.
  - The device exhibits a distinct change in performance, indicating a need for service.
  - The device does not operate normally when the operating instructions are followed.
- Only adjust those controls that are covered in the operating instructions. Improper adjustment of other controls may result in damage that will require extensive work by a qualified technician to repair.

Mounting

- Before working on the rack, make sure that the stabilizers are secured to the rack, extended to the floor, and that the full weight of the rack rests on the floor. Install front and side stabilizers on a single rack or front stabilizers for joined multiple racks before working on the rack.
- Always load the rack from the bottom up, and load the heaviest item in the rack first.
- Make sure that the rack is level and stable before extending a device from the rack.
- Use caution when pressing the device rail release latches and sliding a device into or out of a rack; the slide rails can pinch your fingers.
- After a device is inserted into the rack, carefully extend the rail into a locking position, and then slide the device into the rack.
- Do not overload the AC supply branch circuit that provides power to the rack. The total rack load should not exceed 80 percent of the branch circuit rating.
- Make sure that all equipment used on the rack – including power strips and other electrical connectors – is properly grounded.
- Ensure that proper airflow is provided to devices in the rack.
- Ensure that the operating ambient temperature of the rack environment does not exceed the maximum ambient temperature specified for the equipment by the manufacturer.
- Do not step on or stand on any device when servicing other devices in a rack.

Technical Support

International

- For online technical support – including troubleshooting, documentation, and software updates: **http://eservice.aten.com**
- For telephone support, *Telephone Support*, page iii

North America

Email Support		support@aten-usa.com
Online Technical Support	Troubleshooting Documentation Software Updates	http://www.aten-usa.com/support
Telephone Support		1-888-999-ATEN ext 4988

When you contact us, please have the following information ready beforehand:

- Product model number, serial number, and date of purchase.
- Your computer configuration, including operating system, revision level, expansion cards, and software.
- Any error messages displayed at the time the error occurred.
- The sequence of operations that led up to the error.
- Any other information you feel may be of help.

Specifications

Function		CE620L	CE620R
Connectors	DVI In	1 x DVI-D Female (White)	N/A
	DVI Out	N/A	1 x DVI-D Female (White)
	USB	1 x USB Type B Female (White)	3 x USB Type A Female (White)
	Power	1 x DC Jack	
	Speakers	1 x Mini Stereo Jack Female (Green)	
	Mic	1 x Mini Stereo Jack Female (Pink)	
	Unit to Unit	1 x RJ-45 Female (Black)	
	RS-232	1 x DB-9 Female (Black)	1 x DB-9 Male (Black)
LEDs	Power	1 (Green)	1 (Green)
	Link	1 (Orange)	1 (Orange)
	Video Out	N/A	1 (Orange)
USB	Transfer Rate	USB 2.0 (Up to 30 Mbps)	
Switches	Wakeup PC	N/A	1 x Pushbutton
	Firmware Upgrade / Long Reach / Normal	2 x 2-Segment Switch	2 x 2-Segment Switch
Video		1080p @ 60 Hz up to 100 m via Cat 5e Cable; 1920 x 1200 @ 60 Hz up to 100 m via Cat 6/6a Cable	
Power Consumption		DC 5 V; 3.0 W	DC 5 V; 5.6 W
Environment	Operating Temp.	0–40º C	
	Storage Temp	-20–60º C	
	Humidity	0–80% RH, Non-condensing	
Physical Properties	Housing	Metal	
	Weight	0.64 kg	0.63 kg
	Dimensions (L x W x H)	18.20 x 11.79 x 2.28 cm	

Limited Warranty

ATEN warrants its hardware in the country of purchase against flaws in materials and workmanship for a Warranty Period of two [2] years (warranty period may vary in certain regions/countries) commencing on the date of original purchase. This warranty period includes the LCD panel of ATEN LCD KVM switches. Select products are warranted for an additional year (see *A+ Warranty* for further details). Cables and accessories are not covered by the Standard Warranty.

What is covered by the Limited Hardware Warranty

ATEN will provide a repair service, without charge, during the Warranty Period. If a product is detective, ATEN will, at its discretion, have the option to (1) repair said product with new or repaired components, or (2) replace the entire product with an identical product or with a similar product which fulfills the same function as the defective product. Replaced products assume the warranty of the original product for the remaining period or a period of 90 days, whichever is longer. When the products or components are replaced, the replacing articles shall become customer property and the replaced articles shall become the property of ATEN.

To learn more about our warranty policies, please visit our website:
http://www.aten.com/global/en/legal/policies/warranty-policy/