Desktop HDD

Product Manual

Standard models

ST1000DM003
ST500DM002

100768625, Rev. D
May 2016

Document Revision History

Revision	Date	Pages affected and Description of Change
Rev. A	08/17/2015	Initial release.
Rev. B	09/01/2015	7 & 15: Revised Rated Workload statement
Rev. C	10/20/2015	4: Updated Support URL's 6 & 9: Height changed to 20.0mm & Weight to 415g 7: Op & Non-Op shock, Acoustic Idle max & Updated Warranty link text 10: Conducted noise & DC power edits 13: Op & Non-Op shock 14: Acoustic Idle max 15: Updated Warranty link text 19: Added bullet - "Two base plate assembly options available (see drawings below)" 19-20: Corrected fastener depth penetration (0.14 max...) in mechanical drawings
Rev. D	05/18/2016	6-7 & 12: Temperature section update 6 & 9-10: Removed 64MB-500GB model & specs 7 & 12: Wet Bulb specs updated 8: Updated Bytes/sector 9: Revised Cache values 15: Added Section 2.12.1 Storage 16: Updated to Australian RCM & Korean RRA 19: Fastener penetration depth in text & mechanical drawings= 0.120" 19-20: New mechanical drawings for 2 configurations of base deck offerings

© 2016 Seagate Technology LLC. All rights reserved.

Publication number: 100768625, Rev. D May 2016

Seagate, Seagate Technology and the Spiral logo are registered trademarks of Seagate Technology LLC in the United States and/or other countries. SmartAlign and SeaTools are either trademarks or registered trademarks of Seagate Technology LLC or one of its affiliated companies in the United States and/or other countries. All other trademarks or registered trademarks are the property of their respective owners.

No part of this publication may be reproduced in any form without written permission of Seagate Technology LLC.

Call 877-PUB-TEK1 (877-782-8351) to request permission.

When referring to drive capacity, one gigabyte, or GB, equals one billion bytes and one terabyte, or TB, equals one trillion bytes. Your computer's operating system may use a different standard of measurement and report a lower capacity. In addition, some of the listed capacity is used for formatting and other functions, and thus will not be available for data storage. Actual quantities will vary based on various factors, including file size, file format, features and application software. Actual data rates may vary depending on operating environment and other factors. The export or re-export of hardware or software containing encryption may be regulated by the U.S. Department of Commerce, Bureau of Industry and Security (for more information, visit www.bis.doc.gov), and controlled for import and use outside of the U.S. Seagate reserves the right to change, without notice, product offerings or specifications.

Contents

Seagate® Technology Support Services 4

1.0 Introduction 5
1.1 About the Serial ATA interface 5

2.0 Drive Specifications 6
2.1 Specification summary tables 6
2.2 Formatted capacity 8
2.2.1 LBA mode 8
2.3 Default logical geometry 8
2.4 Recording and interface technology 8
2.5 Physical characteristics 9
2.6 Seek time 9
2.7 Start/stop times 9
2.8 Power specifications 10
2.8.1 Power consumption 10
2.8.2 Conducted noise 11
2.8.3 Voltage tolerance 11
2.8.4 Power-management modes 11
2.9 Environmental specifications 12
2.9.1 Ambient temperature 12
2.9.2 Temperature gradient 12
2.9.3 Humidity 12
2.9.4 Altitude 12
2.9.5 Shock 13
2.9.6 Vibration 13
2.10 Acoustics 14
2.10.1 Test for Prominent Discrete Tones (PDTs) 14
2.11 Electromagnetic immunity 14
2.12 Reliability 15
2.12.1 Storage 15
2.13 Warranty 15
2.14 Agency certification 15
2.14.1 Safety certification 15
2.14.2 Electromagnetic compatibility 15
2.14.3 FCC verification 16
2.15 Environmental protection 17
2.15.1 European Union Restriction of Hazardous Substances (RoHS) Directive 17
2.15.2 China Restriction of Hazardous Substances (RoHS) Directive 17
2.16 Corrosive environment 17

3.0 Configuring and Mounting the Drive 18
3.1 Handling and static-discharge precautions 18
3.2 Configuring the drive 18
3.3 Serial ATA cables and connectors 18
3.4 Drive mounting 19

4.0 Serial ATA (SATA) Interface 21
4.1 Hot-Plug compatibility 21
4.2 Serial ATA device plug connector pin definitions 21
4.3 Supported ATA commands 22
4.3.1 Identify Device command 24
4.3.2 Set Features command 28
4.3.3 S.M.A.R.T. commands 29

Figures

Figure 1 Attaching SATA cabling 18
Figure 2 Mounting dimensions (configuration 1) 19
Figure 3 Mounting dimensions (configuration 2) 20

Seagate® Technology Support Services

For information regarding online support and services, visit: http://www.seagate.com/contacts/

For information regarding Warranty Support, visit: http://www.seagate.com/support/warranty-and-replacements/

For information regarding data recovery services, visit: http://www.seagate.com/services-software/data-recovery-services/

For Seagate OEM, Distribution partner and reseller portals, visit: http://www.seagate.com/partners/

1.0 Introduction

This manual describes the functional, mechanical and interface specifications for the following:
Seagate® Desktop HDD model drives:

ST1000DM003 ST500DM002

These drives provide the following key features:

- 7200 RPM spindle speed.
- Compliant with RoHS requirements in China and Europe.
- Full-track multiple-sector transfer capability without local processor intervention.
- High instantaneous (burst) data-transfer rates (up to 600MB per second).
- Native Command Queuing with command ordering to increase performance in demanding applications.
- Perpendicular recording technology provides the drives with increased areal density.
- Quiet operation.
- Seagate SmartAlign™ technology provides a simple, transparent migration to Advanced Format 4K sectors.
- SeaTools™ diagnostic software performs a drive self-test that eliminates unnecessary drive returns.
- State-of-the-art cache and on-the-fly error-correction algorithms.
- Support for S.M.A.R.T. drive monitoring and reporting.
- Supports latching SATA cables and connectors.
- Worldwide Name (WWN) capability uniquely identifies the drive.

1.1 About the Serial ATA interface

The Serial ATA interface provides several advantages over the traditional (parallel) ATA interface. The primary advantages include:

- Easy installation and configuration with true plug-and-play connectivity. It is not necessary to set any jumpers or other configuration options.
- Thinner and more flexible cabling for improved enclosure airflow and ease of installation.
- Scalability to higher performance levels.

In addition, Serial ATA makes the transition from parallel ATA easy by providing legacy software support. Serial ATA was designed to allow users to install a Serial ATA host adapter and Serial ATA disk drive in the current system and expect all of the existing applications to work as normal.

The Serial ATA interface connects each disk drive in a point-to-point configuration with the Serial ATA host adapter. There is no master/slave relationship with Serial ATA devices like there is with parallel ATA. If two drives are attached on one Serial ATA host adapter, the host operating system views the two devices as if they were both “masters” on two separate ports. This essentially means both drives behave as if they are Device 0 (master) devices.

Note	The host adapter may, optionally, emulate a master/slave environment to host software where two devices on separate Serial ATA ports are represented to host software as a Device 0 (master) and Device 1 (slave) accessed at the same set of host bus addresses. A host adapter that emulates a master/slave environment manages two sets of shadow registers. This is not a typical Serial ATA environment.

The Serial ATA host adapter and drive share the function of emulating parallel ATA device behavior to provide backward compatibility with existing host systems and software. The Command and Control Block registers, PIO and DMA data transfers, resets, and interrupts are all emulated.

The Serial ATA host adapter contains a set of registers that shadow the contents of the traditional device registers, referred to as the Shadow Register Block. All Serial ATA devices behave like Device 0 devices. For additional information about how Serial ATA emulates parallel ATA, refer to the “Serial ATA International Organization: Serial ATA Revision 3.2”. The specification can be downloaded from www.sata-io.org.

2.0 Drive Specifications

Unless otherwise noted, all specifications are measured under ambient conditions, at 25°C, and nominal power. For convenience, the phrases *the drive* and *this drive* are used throughout this manual to indicate the following drive models:

ST1000DM003 ST500DM002

2.1 Specification summary tables

The specifications listed in the following tables are for quick reference. For details on specification measurement or definition, see the appropriate section of this manual.

Table 1 Drive specifications summary for 1TB and 500GB models

Drive Specification	ST1000DM003 -1SB102	ST1000DM003 -1SB10C	ST500DM002 -1SB10A
Formatted capacity (512 bytes/sector)*	1TB		500GB
Guaranteed sectors	1,953,525,168		976,773,168
Heads	2		1
Disks	1		
Bytes per sector	4096		
Default sectors per track	63		
Default read/write heads	16		
Default cylinders	16,383		
Recording density (max)	1779 Kb/in		
Track density (avg)	340 Ktracks/in		
Areal density (avg)	620Gb/in^2		
Spindle speed	7200 RPM		
Internal data transfer rate (max)	1695Mb/s		
Maximum sustained data rate, OD read	151MB/s		
I/O data-transfer rate (max)	600MB/s		
ATA data-transfer modes supported	PIO modes: 0 to 4 Multiword DMA modes: 0 to 2 Ultra DMA modes: 0 to 6		
Cache buffer	64MB	32MB	16MB
Height (max)	20.0mm / 0.787 in		
Width (max)	101.85mm / 4.010 in		
Length (max)	146.99mm / 5.787 in		
Weight (typical)	415g / 0.915 lb		
Average latency	4.16ms		
Power-on to ready (sec max)	<10.0		
Standby to ready (sec max)	<10.0		
Track-to-track seek time (typical)	<1.0ms read <1.2ms write		
Average seek, read (ms typ) Average seek, write (ms typ)	<12.0 <13.0		
Startup current (typical) 12V (peak)	2.0A		
Voltage tolerance (including noise)	5V ±5% 12V ±10%		
Non-Operating temperature (Ambient °C)	–40° to 70		
Operating ambient temperature (min °C)	0		

Table 1 Drive specifications summary for 1TB and 500GB models (continued)

Drive Specification	ST1000DM003 -1SB102	ST1000DM003 -1SB10C	ST500DM002 -1SB10A
Operating temperature (Drive case max °C)	60		
Temperature gradient	20°C per hour max (operating) 30°C per hour max (non-operating)		
Relative humidity	5% to 95% (operating) 5% to 95% (non-operating)		
Relative humidity gradient (max)	30% per hour		
Wet bulb temperature (max)	26°C max (operating) 29°C max (nonoperating)		
Altitude, operating	–304.8m to 3,048m (–1000 ft to 10,000+ ft)		
Altitude, non-operating (below mean sea level, max)	–304.8m to 12,192m (–1000 ft to 40,000+ ft)		
Operational Shock (max)	80 Gs at 2ms		
Non-Operational Shock (max)	300 Gs at 2ms		
Vibration, operating	2Hz to 22Hz: 0.25 Gs, Limited displacement 22Hz to 350Hz: 0.50 Gs 350Hz to 500Hz: 0.25 Gs		
Vibration, non-operating	5Hz to 22Hz: 3.0 Gs 22Hz to 350Hz: 3.0 Gs 350Hz to 500Hz: 3.0 Gs		
Drive acoustics, sound power			
Idle**	2.4 bels (typical) 2.5 bels (max)		
Seek	2.6 bels (typical) 2.7 bels (max)		
Non-recoverable read errors	1 per 10^{14} bits read		
Annualized Failure Rate (AFR)	<1%		
Rated Workload	Average annualized workload rating: <55 TB/year. The AFR specification for the product assumes the I/O workload does not exceed the average annualized workload rate limit of 55 TB/year. Workloads exceeding the annualized rate may degrade the product AFR and impact reliability as experienced by the particular application. The average annualized workload rate limit is in units of TB per calendar year.		
Warranty	To determine the warranty for a specific drive, use a web browser to access the following web page: http://www.seagate.com/support/warranty-and-replacements/. From this page, click on the "Is my Drive under Warranty" link. The following are required to be provided: the drive serial number, model number (or part number) and country of purchase.The system will display the warranty information for the drive.		
Contact start-stop cycles	50,000 at 25°C, 50% rel. humidity		
Supports Hotplug operation per the Serial ATA Revision 3.2 specification	Yes		

*One GB equals one billion bytes when referring to hard drive capacity. Accessible capacity may vary depending on operating environment and formatting.

**During periods of drive idle, some offline activity may occur according to the S.M.A.R.T. specification, which may increase acoustic and power to operational levels.

2.2 Formatted capacity

Model	Formatted capacity*	Guaranteed sectors	Bytes per sector
ST1000DM003	1TB	1,953,525,168	4096 physical (emulated at 512-byte sectors)
ST500DM002	500GB	976,773,168	

*One GB equals one billion bytes when referring to hard drive capacity. Accessible capacity may vary depending on operating environment and formatting.

2.2.1 LBA mode

When addressing these drives in LBA mode, all blocks (sectors) are consecutively numbered from 0 to *n–1*, where *n* is the number of guaranteed sectors as defined above.

See Section 4.3.1, "Identify Device command" (words 60-61 and 100-103) for additional information about 48-bit addressing support of drives with capacities over 137GB.

2.3 Default logical geometry

Cylinders	Read/write heads	Sectors per track
16,383	16	63

LBA mode
When addressing these drives in LBA mode, all blocks (sectors) are consecutively numbered from 0 to *n–1*, where *n* is the number of guaranteed sectors as defined above.

2.4 Recording and interface technology

Interface	Serial ATA (SATA)
Recording method	Perpendicular
Recording density (Kb/in max)	1779
Track density (Ktracks/in avg)	340
Areal density (Gb/in^2 avg)	620
Spindle speed (RPM)	7200 ± 0.2%
Internal data transfer rate (Mb/s max)	1695
Maximum sustained data transfer rate, OD read (MB/s)	151
I/O data-transfer rate (MB/s max)	600

2.5 Physical characteristics

Maximum height 1TB models 500GB models	20.00mm / 0.787 in
Maximum width	101.85mm / 4.010 in
Maximum length	146.99mm / 5.787 in
Typical weight 1TB models 500GB models	415g / 0.915 lb
Cache buffer	
ST1000DM003-1SB102	64MB (65,536kb)
ST1000DM003-1SB10C	32MB (32,768kb)
ST500DM002-1SB10A	16MB (16,384kb)

2.6 Seek time

Seek measurements are taken with nominal power at 25°C ambient temperature. All times are measured using drive diagnostics. The specifications in the table below are defined as follows:

- Track-to-track seek time is an average of all possible single-track seeks in both directions.
- Average seek time is a true statistical random average of at least 5,000 measurements of seeks between random tracks, less overhead.

Typical seek times (ms)	Read	Write
Track-to-track	1.0	1.2
Average	<12.0	<13.0
Average latency	4.16	

Note	These drives are designed to consistently meet the seek times represented in this manual. Physical seeks, regardless of mode (such as track-to-track and average), are expected to meet the noted values. However, due to the manner in which these drives are formatted, benchmark tests that include command overhead or measure logical seeks may produce results that vary from these specifications.

2.7 Start/stop times

	1TB and 500GB models
Power-on to Ready (typ sec)	<10.0
Standby to Ready (typ sec)	<10.0
Ready to spindle stop (typ sec)	10

2.8 Power specifications

The drive receives DC power (+5V or +12V) through a native SATA power connector. Refer to Figure 1 on page 18.

2.8.1 Power consumption

Power requirements for the drives are listed in Table 2 on page 10. Typical power measurements are based on an average of drives tested, under nominal conditions, using 5.0V and 12.0V input voltage at 25°C ambient temperature.

- Spinup power

  Spinup power is measured from the time of power-on to the time that the drive spindle reaches operating speed.

- Read/write power and current

  Read/write power is measured with the heads on track, based on a 16-sector write followed by a 32-ms delay, then a 16-sector read followed by a 32-ms delay.

- Operating power and current

  Operating power is measured using 40 percent random seeks, 40 percent read/write mode (1 write for each 10 reads) and 20 percent drive idle mode.

- Idle mode power

  Idle mode power is measured with the drive up to speed, with servo electronics active and with the heads in a random track location.

- Standby mode

  During Standby mode, the drive accepts commands, but the drive is not spinning, and the servo and read/write electronics are in power-down mode.

Table 2 DC power requirements (1TB & 500GB models)

Power dissipation (1-disk values shown)	Avg (watts 25° C)	Avg 5V typ amps	Avg 12V typ amps
Spinup	—	—	2.0 (peak)
Idle* †	4.21	0.261	0.242
Operating	5.57	0.523	0.246
Standby	0.66	0.116	0.006
Sleep	0.66	0.116	0.006

* During periods of drive idle, some offline activity may occur according to the S.M.A.R.T. specification, which may increase acoustic and power to operational levels.
† 5W IDLE with DIPLM Enabled

2.8.2 Conducted noise

Input noise ripple is measured at the host system power supply across an equivalent 80-ohm resistive load on the +12 volt line or an equivalent 15-ohm resistive load on the +5 volt line.

- Using 12-volt power, the drive is expected to operate with a maximum of 200 mV peak-to-peak square-wave injected noise at up to 10MHz.
- Using 5-volt power, the drive is expected to operate with a maximum of 150 mV peak-to-peak square-wave injected noise at up to 10MHz.

Note	Equivalent resistance is calculated by dividing the nominal voltage by the typical RMS read/write current.

2.8.3 Voltage tolerance

Voltage tolerance (including noise):

- 5V ±5%
- 12V ±10

2.8.4 Power-management modes

The drive provides programmable power management to provide greater energy efficiency. In most systems, users can control power management through the system setup program. The drive features the following power-management modes:

Power modes	Heads	Spindle	Buffer
Active	Tracking	Rotating	Enabled
Idle	Tracking	Rotating	Enabled
Standby	Parked	Stopped	Enabled
Sleep	Parked	Stopped	Disabled

- Active mode

  The drive is in Active mode during the read/write and seek operations.
- Idle mode

  The buffer remains enabled, and the drive accepts all commands and returns to Active mode any time disk access is necessary.
- Standby mode

  The drive enters Standby mode when the host sends a Standby Immediate command. If the host has set the standby timer, the drive can also enter Standby mode automatically after the drive has been inactive for a specifiable length of time. The standby timer delay is established using a Standby or Idle command. In Standby mode, the drive buffer is enabled, the heads are parked and the spindle is at rest. The drive accepts all commands and returns to Active mode any time disk access is necessary.
- Sleep mode

  The drive enters Sleep mode after receiving a Sleep command from the host. In Sleep mode, the drive buffer is disabled, the heads are parked and the spindle is at rest. The drive leaves Sleep mode after it receives a Hard Reset or Soft Reset from the host. After receiving a reset, the drive exits Sleep mode and enters Standby mode with all current translation parameters intact.
- Idle and Standby timers

  Each time the drive performs an Active function (read, write or seek), the standby timer is reinitialized and begins counting down from its specified delay times to zero. If the standby timer reaches zero before any drive activity is required, the drive makes a transition to Standby mode. In both Idle and Standby mode, the drive accepts all commands and returns to Active mode when disk access is necessary.

2.9 Environmental specifications

2.9.1 Ambient temperature

Ambient temperature is defined as the temperature of the environment immediately surrounding the drive. Actual drive case temperature should not exceed 69°C (156°F) within the operating ambient conditions.

Non-Operating temperature (Ambient °C)	–40° to 70
Operating ambient temperature (min °C)	0
Operating temperature (Drive case max °C)	60

2.9.2 Temperature gradient

Operating	20°C per hour (36°F per hour max), without condensation
Non-operating	30°C per hour (54°F per hour max)

2.9.3 Humidity

2.9.3.1 Relative humidity

Operating	5% to 95% non-condensing (30% per hour max)
Nonoperating	5% to 95% non-condensing (30% per hour max)

2.9.3.2 Wet bulb temperature

Operating	26°C / 78.8°F (rated)
Non-operating	29°C / 84.2°F (rated)

2.9.4 Altitude

Operating	–304m to 3048m (–1000 ft. to 10,000 ft.)
Non-operating	–304m to 12,192m (–1000 ft. to 40,000+ ft.)

2.9.5 Shock

All shock specifications assume that the drive is mounted securely with the input shock applied at the drive mounting screws. Shock may be applied in the X, Y or Z axis.

2.9.5.1 Operating shock

These drives comply with the performance levels specified in this document when subjected to a maximum operating shock of 80 Gs based on half-sine shock pulses of 2 ms during read operations. Shocks should not be repeated more than two times per second.

2.9.5.2 Non-operating shock

1TB/500GB models

The non-operating shock level that the drive can experience without incurring physical damage or degradation in performance when subsequently put into operation is 300 Gs based on a non-repetitive half-sine shock pulse of 2 ms duration.

2.9.6 Vibration

All vibration specifications assume that the drive is mounted securely with the input vibration applied at the drive mounting screws. Vibration may be applied in the X, Y or Z axis.

2.9.6.1 Operating vibration

The maximum vibration levels that the drive may experience while meeting the performance standards specified in this document are specified below.

2Hz to 22Hz	0.25 Gs (Limited displacement)
22Hz to 350Hz	0.50 Gs
350Hz to 500Hz	0.25 Gs

2.9.6.2 Non-operating vibration

The maximum non-operating vibration levels that the drive may experience without incurring physical damage or degradation in performance when subsequently put into operation are specified below.

5Hz to 22Hz	3.0 Gs (Limited displacement)
22Hz to 350Hz	3.0 Gs
350Hz to 500Hz	3.0 Gs

2.10 Acoustics

Drive acoustics are measured as overall A-weighted acoustic sound power levels (no pure tones). All measurements are consistent with ISO document 7779. Sound power measurements are taken under essentially free-field conditions over a reflecting plane. For all tests, the drive is oriented with the cover facing upward.

Note	For seek mode tests, the drive is placed in seek mode only. The number of seeks per second is defined by the following equation: (Number of seeks per second = 0.4 / (average latency + average access time)

Table 3 Fluid Dynamic Bearing (FDB) motor acoustics

ST1000DM003 and ST500DM002	
Idle*	**Seek**
2.4 bels (typ) 2.5 bels (max)	2.6 bels (typ) 2.7 bels (max)

*During periods of drive idle, some offline activity may occur according to the S.M.A.R.T. specification, which may increase acoustic and power to operational levels.

2.10.1 Test for Prominent Discrete Tones (PDTs)

Seagate follows the ECMA-74 standards for measurement and identification of PDTs. An exception to this process is the use of the absolute threshold of hearing. Seagate uses this threshold curve (originated in ISO 389-7) to discern tone audibility and to compensate for the inaudible components of sound prior to computation of tone ratios according to Annex D of the ECMA-74 standards.

2.11 Electromagnetic immunity

When properly installed in a representative host system, the drive operates without errors or degradation in performance when subjected to the radio frequency (RF) environments defined in the following Table 4:

Table 4 Radio frequency environments

Test	Description	Performance level	Reference standard
Electrostatic discharge	Contact, HCP, VCP: ± 4 kV; Air: ± 8 kV	B	EN61000-4-2: 95
Radiated RF immunity	80MHz to 1,000MHz, 3 V/m, 80% AM with 1kHz sine 900MHz, 3 V/m, 50% pulse modulation @ 200Hz	A	EN61000-4-3: 96 ENV50204: 95
Electrical fast transient	± 1 kV on AC mains, ± 0.5 kV on external I/O	B	EN61000-4-4: 95
Surge immunity	± 1 kV differential, ± 2 kV common, AC mains	B	EN61000-4-5: 95
Conducted RF immunity	150kHz to 80MHz, 3 Vrms, 80% AM with 1kHz sine	A	EN61000-4-6: 97
Voltage dips, interrupts	0% open, 5 seconds 0% short, 5 seconds 40%, 0.10 seconds 70%, 0.01 seconds	C C C B	EN61000-4-11: 94

2.12 Reliability

The production disk drive shall achieve an annualized failure-rate of <1.0% over a 5 year service life when used in Desktop Storage field conditions as limited by the following:

- 2400 power-on-hours per year.

Nonrecoverable read errors	1 per 10^{14} bits read, max
Annualized Failure Rate (AFR)	<1% (nominal power, 25°C ambient temperature)
Rated Workload	Average annualized workload rating: <55 TB/year. The AFR specification for the product assumes the I/O workload does not exceed the average annualized workload rate limit of 55 TB/year. Workloads exceeding the annualized rate may degrade the product AFR and impact reliability as experienced by the particular application. The average annualized workload rate limit is in units of TB per calendar year.
Contact start-stop cycles	50,000 cycles (at nominal voltage and temperature, with 60 cycles per hour and a 50% duty cycle)
Preventive maintenance	None required.

2.12.1 Storage

Maximum storage periods are 180 days within original unopened Seagate shipping package or 60 days unpackaged within the defined non-operating limits (refer to environmental section in this manual). Storage can be extended to 1 year packaged or unpackaged under optimal environmental conditions (25°C, <40% relative humidity non-condensing, and non-corrosive environment). During any storage period the drive non-operational temperature, humidity, wet bulb, atmospheric conditions, shock, vibration, magnetic and electrical field specifications should be followed.

2.13 Warranty

To determine the warranty for a specific drive, use a web browser to access the following web page: http://www.seagate.com/support/warranty-and-replacements/.

From this page, click on the "Is my Drive under Warranty" link. The following are required to be provided: the drive serial number, model number (or part number) and country of purchase. The system will display the warranty information for the drive.

2.14 Agency certification

2.14.1 Safety certification

These products are certified to meet the requirements of UL60950-1, CSA60950-1 and EN60950 and so marked as to the certify agency.

2.14.2 Electromagnetic compatibility

Hard drives that display the CE mark comply with the European Union (EU) requirements specified in the Electromagnetic Compatibility Directive (2004/108/EC) as put into place 20 July 2007. Testing is performed to the levels specified by the product standards for Information Technology Equipment (ITE). Emission levels are defined by EN 55022, Class B and the immunity levels are defined by EN 55024.

Drives are tested in representative end-user systems. Although CE-marked Seagate drives comply with the directives when used in the test systems, we cannot guarantee that all systems will comply with the directives. The drive is designed for operation inside a properly designed enclosure, with properly shielded I/O cable (if necessary) and terminators on all unused I/O ports. Computer manufacturers and system integrators should confirm EMC compliance and provide CE marking for their products.

Korean RRA

If these drives have the Korean Communications Commission (KCC) logo, they comply with paragraph 1 of Article 11 of the Electromagnetic Compatibility control Regulation and meet the Electromagnetic Compatibility (EMC) Framework requirements of the Radio Research Agency (RRA) Communications Commission, Republic of Korea.

These drives have been tested and comply with the Electromagnetic Interference/Electromagnetic Susceptibility (EMI/EMS) for Class B products. Drives are tested in a representative, end-user system by a Korean-recognized lab.

Australian RCM Compliance Mark

Models displayed with the RCM compliance mark, comply with the mandatory standards as per the Australian Communications and Media Authority (ACMA) Electromagnetic Compatibility (EMC) regulatory arrangement.

2.14.3 FCC verification

These drives are intended to be contained solely within a personal computer or similar enclosure (not attached as an external device). As such, each drive is considered to be a subassembly even when it is individually marketed to the customer. As a subassembly, no Federal Communications Commission verification or certification of the device is required.

Seagate has tested this device in enclosures as described above to ensure that the total assembly (enclosure, disk drive, motherboard, power supply, etc.) does comply with the limits for a Class B computing device, pursuant to Subpart J, Part 15 of the FCC rules. Operation with non-certified assemblies is likely to result in interference to radio and television reception.

Radio and television interference. This equipment generates and uses radio frequency energy and if not installed and used in strict accordance with the manufacturer's instructions, may cause interference to radio and television reception.

This equipment is designed to provide reasonable protection against such interference in a residential installation. However, there is no guarantee that interference will not occur in a particular installation. If this equipment does cause interference to radio or television, which can be determined by turning the equipment on and off, users are encouraged to try one or more of the following corrective measures:

- Reorient the receiving antenna.
- Move the device to one side or the other of the radio or TV.
- Move the device farther away from the radio or TV.
- Plug the computer into a different outlet so that the receiver and computer are on different branch outlets.

If necessary, users should consult the dealer or an experienced radio/television technician for additional suggestions. Users may find helpful the following booklet prepared by the Federal Communications Commission: *How to Identify and Resolve Radio-Television Interference Problems*. This booklet is available from the Superintendent of Documents, U.S. Government Printing Office, Washington, DC 20402. Refer to publication number 004-000-00345-4.

2.15 Environmental protection

Seagate designs its products to meet environmental protection requirements worldwide, including regulations restricting certain chemical substances.

2.15.1 European Union Restriction of Hazardous Substances (RoHS) Directive

The European Union Restriction of Hazardous Substances (RoHS) Directive, restricts the presence of chemical substances, including Lead, Cadmium, Mercury, Hexavalent Chromium, PBB and PBDE, in electronic products, effective July 2006. This drive is manufactured with components and materials that comply with the RoHS Directive.

2.15.2 China Restriction of Hazardous Substances (RoHS) Directive 中国限制危险物品的指令

This product has an Environmental Protection Use Period (EPUP) of 20 years. The following table contains information mandated by China's "Marking Requirements for Control of Pollution Caused by Electronic Information Products" Standard.

该产品具有20年的环境保护使用周期 （EPUP）。 下表包含了中国 “电子产品所导致的污染的控制的记号要求”所指定的信息。

Name of Parts 部件名称	Toxic or Hazardous Substances or Elements有毒有害物质或元素					
	Lead 铅 （Pb）	Mercury 汞 （Hg）	Cadmium 镉 （Cd）	Hexavalent Chromium 六价铬 （Cr6+）	Polybrominated Diphenyl 多溴联苯 （PBB）	Polybrominated Diphenyl Ether 多溴二苯醚 （PBDE）
PCBA	X	O	O	O	O	O
HDA	X	O	O	O	O	O

"O" indicates the hazardous and toxic substance content of the part (at the homogeneous material level) is lower than the threshold defined by the China RoHS MCV Standard.

“O”表示该部件（于同类物品程度上）所含的危险和有毒物质低于中国RoHS MCV标准所定义的门槛值。

"X" indicates the hazardous and toxic substance content of the part (at the homogeneous material level) is over the threshold defined by the China RoHS MCV Standard.

“X”表示该部件（于同类物品程度上）所含的危险和有毒物质超出中国RoHS MCV标准所定义的门槛值。

2.16 Corrosive environment

Seagate electronic drive components pass accelerated corrosion testing equivalent to 10 years exposure to light industrial environments containing sulfurous gases, chlorine and nitric oxide, classes G and H per ASTM B845. However, this accelerated testing cannot duplicate every potential application environment. Users should use caution exposing any electronic components to uncontrolled chemical pollutants and corrosive chemicals as electronic drive component reliability can be affected by the installation environment. The silver, copper, nickel and gold films used in Seagate products are especially sensitive to the presence of sulfide, chloride, and nitrate contaminants. Sulfur is found to be the most damaging. In addition, electronic components should never be exposed to condensing water on the surface of the printed circuit board assembly (PCBA) or exposed to an ambient relative humidity greater than 95%. Materials used in cabinet fabrication, such as vulcanized rubber, that can outgas corrosive compounds should be minimized or eliminated. The useful life of any electronic equipment may be extended by replacing materials near circuitry with sulfide-free alternatives.

3.0 Configuring and Mounting the Drive

This section contains the specifications and instructions for configuring and mounting the drive.

3.1 Handling and static-discharge precautions

After unpacking, and before installation, the drive may be exposed to potential handling and electrostatic discharge (ESD) hazards. Observe the following standard handling and static-discharge precautions:

Caution	• Before handling the drive, put on a grounded wrist strap, or ground yourself frequently by touching the metal chassis of a computer that is plugged into a grounded outlet. Wear a grounded wrist strap throughout the entire installation procedure. • Handle the drive by its edges or frame *only*. • The drive is extremely fragile—handle it with care. Do not press down on the drive top cover. • Always rest the drive on a padded, antistatic surface until mounting it in the computer. • Do not touch the connector pins or the printed circuit board. • Do not remove the factory-installed labels from the drive or cover them with additional labels. Removal voids the warranty. Some factory-installed labels contain information needed to service the drive. Other labels are used to seal out dirt and contamination.

3.2 Configuring the drive

Each drive on the Serial ATA interface connects point-to-point with the Serial ATA host adapter. There is no master/slave relationship because each drive is considered a master in a point-to-point relationship. If two drives are attached on one Serial ATA host adapter, the host operating system views the two devices as if they were both “masters” on two separate ports. Both drives behave as if they are Device 0 (master) devices.

Serial ATA drives are designed for easy installation. It is usually not necessary to set any jumpers on the drive for proper operation; however, if users connect the drive and receive a “drive not detected” error, the SATA-equipped motherboard or host adapter may use a chipset that does not support SATA speed autonegotiation.

3.3 Serial ATA cables and connectors

The Serial ATA interface cable consists of four conductors in two differential pairs, plus three ground connections. The cable size may be 30 to 26 AWG with a maximum length of one meter (39.37 inches). See **Table 5** for connector pin definitions. Either end of the SATA signal cable can be attached to the drive or host.

For direct backplane connection, the drive connectors are inserted directly into the host receptacle. The drive and the host receptacle incorporate features that enable the direct connection to be hot pluggable and blind mateable.

For installations which require cables, users can connect the drive as illustrated in **Figure 1**.

Figure 1 **Attaching SATA cabling**

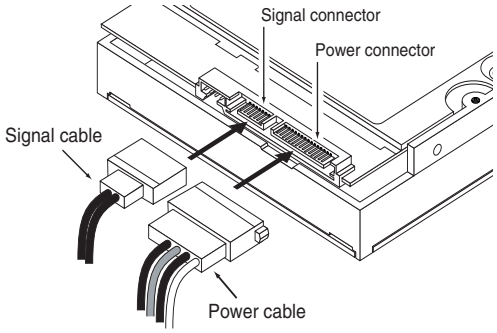

Each cable is keyed to ensure correct orientation. Desktop HDD drives support latching SATA connectors.

3.4 Drive mounting

Users can mount the drive in any orientation using four screws in the side-mounting holes or four screws in the bottom-mounting holes. See Figure 2 or Figure 3 for drive mounting dimensions. Follow these important mounting precautions when mounting the drive:

- Allow a minimum clearance of 0.030 inches (0.76mm) around the entire perimeter of the drive for cooling.
- Use only 6-32 UNC mounting screws.
- The screws should be inserted no more than 0.12 inch (3.05mm) into the bottom or side mounting holes.
- Do not overtighten the mounting screws (maximum torque: 6 inch-lb).
- Two base plate assembly options available (see drawings below)

Seagate utilizes two base decks for 500GB and 1TB capacities, as shown below.

Figure 2 Mounting dimensions (*configuration 1*)

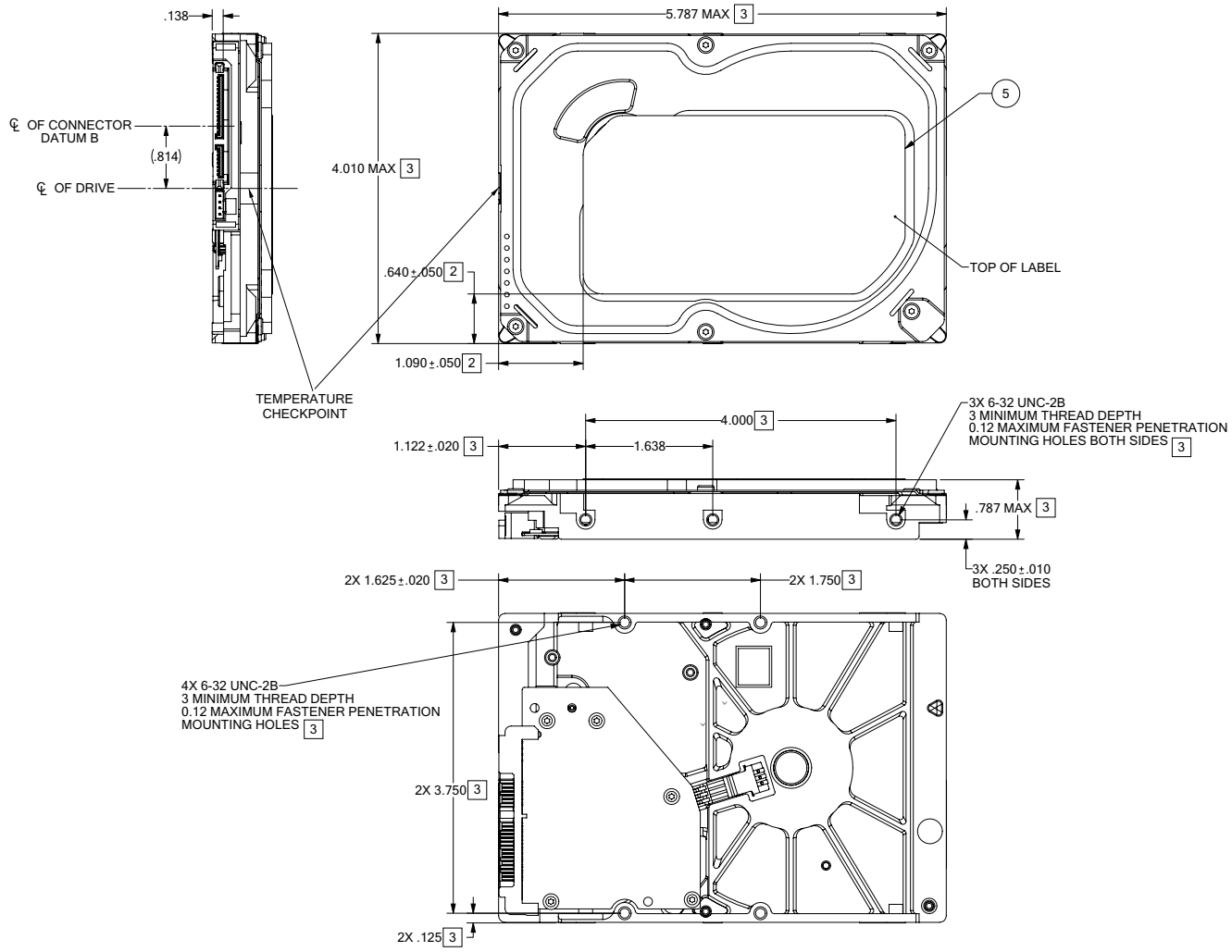

Note	Drawings are for mounting hole reference only. PCBA show in pictorial only and can vary based on specific customer configurations.

***Figure 3 Mounting dimensions* (configuration 2)**

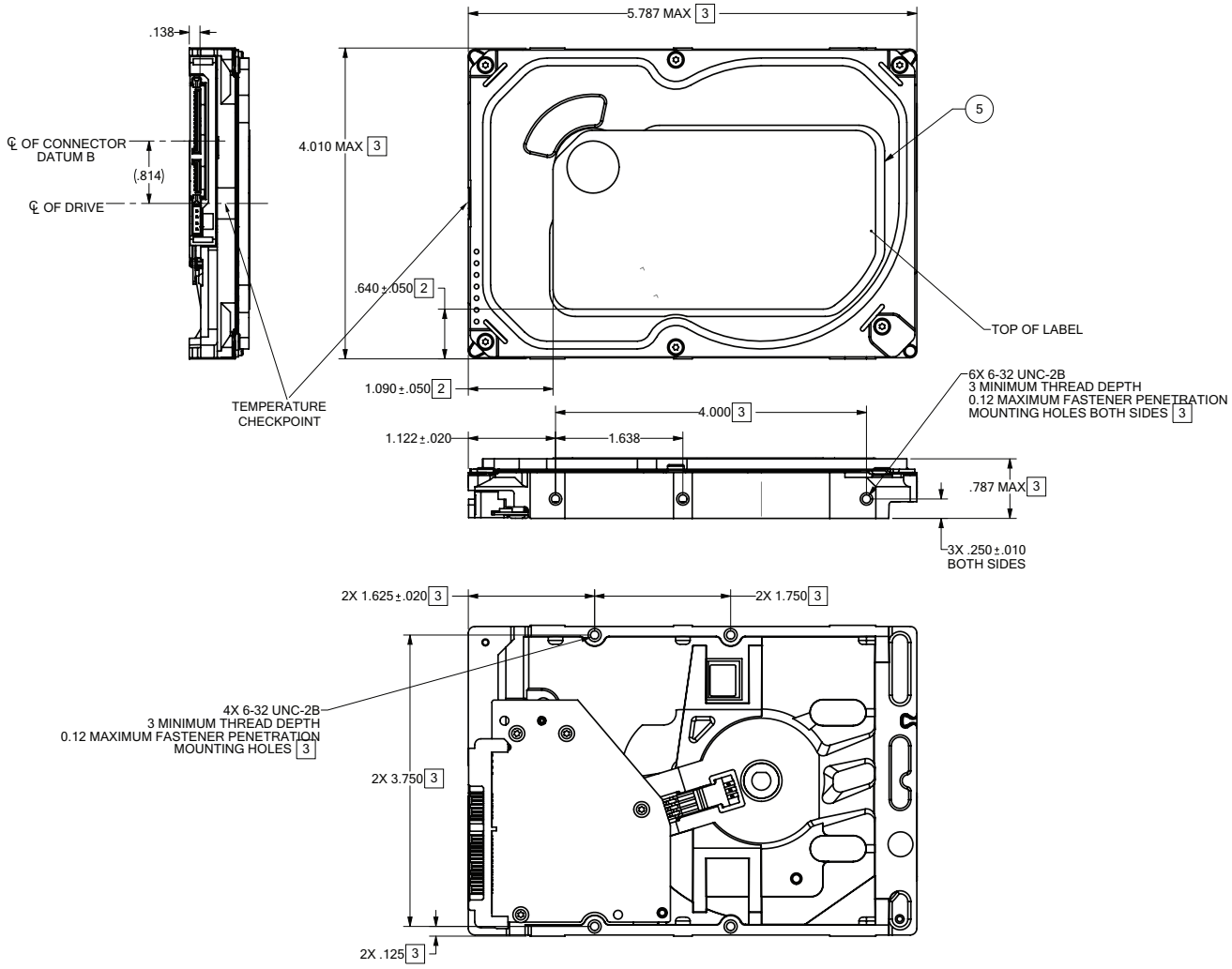

Note	Drawings are for mounting hole reference only. PCBA show in pictorial only and can vary based on specific customer configurations.

4.0 Serial ATA (SATA) Interface

These drives use the industry-standard Serial ATA interface that supports FIS data transfers. It supports ATA programmed input/output (PIO) modes 0 to 4; multiword DMA modes 0 to 2, and Ultra DMA modes 0 to 6.

For detailed information about the Serial ATA interface, refer to the "Serial ATA: High Speed Serialized AT Attachment" specification.

4.1 Hot-Plug compatibility

Desktop HDD drives incorporate connectors which enable users to hot plug these drives in accordance with the Serial ATA Revision 2.5 specification. This specification can be downloaded from www.serialata.org.

4.2 Serial ATA device plug connector pin definitions

Table 5 summarizes the signals on the Serial ATA interface and power connectors.

Table 5 Serial ATA connector pin definitions

Segment	Pin	Function	Definition
Signal	S1	Ground	2nd mate
	S2	A+	Differential signal pair A from Phy
	S3	A-	
	S4	Ground	2nd mate
	S5	B-	Differential signal pair B from Phy
	S6	B+	
	S7	Ground	2nd mate
Key and spacing separate signal and power segments			
Power	P1	V_{33}	3.3V power
	P2	V_{33}	3.3V power
	P3	V_{33}	3.3V power, pre-charge, 2nd mate
	P4	Ground	1st mate
	P5	Ground	2nd mate
	P6	Ground	2nd mate
	P7	V_5	5V power, pre-charge, 2nd mate
	P8	V_5	5V power
	P9	V_5	5V power
	P10	Ground	2nd mate
	P11	Ground or LED signal	If grounded, drive does not use deferred spin
	P12	Ground	1st mate.
	P13	V_{12}	12V power, pre-charge, 2nd mate
	P14	V_{12}	12V power
	P15	V_{12}	12V power

Notes

1. All pins are in a single row, with a 1.27 mm (0.050") pitch.
2. The comments on the mating sequence apply to the case of backplane blindmate connector only. In this case, the mating sequences are:
   - the ground pins P4 and P12.
   - the pre-charge power pins and the other ground pins.
   - the signal pins and the rest of the power pins.
3. There are three power pins for each voltage. One pin from each voltage is used for pre-charge when installed in a blind-mate back-plane configuration.
   - All used voltage pins (V_x) must be terminated.

4.3 Supported ATA commands

The following table lists Serial ATA standard commands that the drive supports.
For a detailed description of the ATA commands, refer to the Serial ATA International Organization: Serial ATA Revision 2.6 (http://www.sata-io.org).

See "S.M.A.R.T. commands" on page 29 for details and subcommands used in the S.M.A.R.T. implementation.

Command name	Command code (in hex)
Check Power Mode	$E5_H$
Device Configuration Freeze Lock	$B1_H$ / $C1_H$
Device Configuration Identify	$B1_H$ / $C2_H$
Device Configuration Restore	$B1_H$ / $C0_H$
Device Configuration Set	$B1_H$ / $C3_H$
Device Reset	08_H
Download Microcode	92_H
Execute Device Diagnostics	90_H
Flush Cache	$E7_H$
Flush Cache Extended	EA_H
Format Track	50_H
Identify Device	EC_H
Idle	$E3_H$
Idle Immediate	$E1_H$
Initialize Device Parameters	91_H
Read Buffer	$E4_H$
Read DMA	$C8_H$
Read DMA Extended	25_H
Read DMA Without Retries	$C9_H$
Read Log Ext	$2F_H$
Read Multiple	$C4_H$
Read Multiple Extended	29_H
Read Native Max Address	$F8_H$
Read Native Max Address Extended	27_H
Read Sectors	20_H
Read Sectors Extended	24_H
Read Sectors Without Retries	21_H
Read Verify Sectors	40_H
Read Verify Sectors Extended	42_H
Read Verify Sectors Without Retries	41_H
Recalibrate	10_H
Security Disable Password	$F6_H$

Command name	Command code (in hex)	
Security Erase Prepare	$F3_H$	
Security Erase Unit	$F4_H$	
Security Freeze	$F5_H$	
Security Set Password	$F1_H$	
Security Unlock	$F2_H$	
Seek	70_H	
Set Features	EF_H	
Set Max Address	$F9_H$	
Note: Individual Set Max Address commands are identified by the value placed in the Set Max Features register as defined to the right.	Address: Password: Lock: Unlock: Freeze Lock:	00_H 01_H 02_H 03_H 04_H
Set Max Address Extended	37_H	
Set Multiple Mode	$C6_H$	
Sleep	$E6_H$	
S.M.A.R.T. Disable Operations	$B0_H$ / $D9_H$	
S.M.A.R.T. Enable/Disable Autosave	$B0_H$ / $D2_H$	
S.M.A.R.T. Enable Operations	$B0_H$ / $D8_H$	
S.M.A.R.T. Execute Offline	$B0_H$ / $D4_H$	
S.M.A.R.T. Read Attribute Thresholds	$B0_H$ / $D1_H$	
S.M.A.R.T. Read Data	$B0_H$ / $D0_H$	
S.M.A.R.T. Read Log Sector	$B0_H$ / $D5_H$	
S.M.A.R.T. Return Status	$B0_H$ / DA_H	
S.M.A.R.T. Save Attribute Values	$B0_H$ / $D3_H$	
S.M.A.R.T. Write Log Sector	$B0_H$ / $D6_H$	
Standby	$E2_H$	
Standby Immediate	$E0_H$	
Write Buffer	$E8_H$	
Write DMA	CA_H	
Write DMA Extended	35_H	
Write DMA FUA Extended	$3D_H$	
Write DMA Without Retries	CB_H	
Write Log Extended	$3F_H$	
Write Multiple	$C5_H$	
Write Multiple Extended	39_H	
Write Multiple FUA Extended	CE_H	
Write Sectors	30_H	

Command name	Command code (in hex)
Write Sectors Without Retries	31_H
Write Sectors Extended	34_H
Write Uncorrectable	45_H

4.3.1 Identify Device command

The Identify Device command (command code EC_H) transfers information about the drive to the host following power up. The data is organized as a single 512-byte block of data, whose contents are shown in on page 22. All reserved bits or words should be set to zero. Parameters listed with an "x" are drive-specific or vary with the state of the drive.

The following commands contain drive-specific features that may not be included in the Serial ATA specification.

Word	Description	Value
0	Configuration information: • Bit 15: 0 = ATA; 1 = ATAPI • Bit 7: removable media • Bit 6: removable controller • Bit 0: reserved	$0C5A_H$
1	Number of logical cylinders	16,383
2	ATA-reserved	0000_H
3	Number of logical heads	16
4	Retired	0000_H
5	Retired	0000_H
6	Number of logical sectors per logical track: 63	$003F_H$
7–9	Retired	0000_H
10–19	Serial number: (20 ASCII characters, 0000_H = none)	ASCII
20	Retired	0000_H
21	Retired	0400_H
22	Obsolete	0000_H
23–26	Firmware revision (8 ASCII character string, padded with blanks to end of string)	x.xx
27–46	Drive model number: (40 ASCII characters, padded with blanks to end of string)	
47	(Bits 7–0) Maximum sectors per interrupt on Read multiple and Write multiple (16)	8010_H
48	Reserved	0000_H
49	Standard Standby timer, IORDY supported and may be disabled	$2F00_H$
50	ATA-reserved	0000_H
51	PIO data-transfer cycle timing mode	0200_H
52	Retired	0200_H
53	Words 54–58, 64–70 and 88 are valid	0007_H
54	Number of current logical cylinders	$xxxx_H$

Word	Description	Value
55	Number of current logical heads	$xxxx_H$
56	Number of current logical sectors per logical track	$xxxx_H$
57–58	Current capacity in sectors	$xxxx_H$
59	Number of sectors transferred during a Read Multiple or Write Multiple command	$xxxx_H$
60–61	Total number of user-addressable LBA sectors available (see Section 2.2 for related information) *__Note:__ The maximum value allowed in this field is: 0FFFFFFFh (268,435,455 sectors, 137GB). Drives with capacities over 137GB will have 0FFFFFFFh in this field and the actual number of user-addressable LBAs specified in words 100-103. This is required for drives that support the 48-bit addressing feature.	0FFFFFFFh*
62	Retired	0000_H
63	Multiword DMA active and modes supported (see note following this table)	$xx07_H$
64	Advanced PIO modes supported (modes 3 and 4 supported)	0003_H
65	Minimum multiword DMA transfer cycle time per word (120 nsec)	0078_H
66	Recommended multiword DMA transfer cycle time per word (120 nsec)	0078_H
67	Minimum PIO cycle time without IORDY flow control (240 nsec)	$00F0_H$
68	Minimum PIO cycle time with IORDY flow control (120 nsec)	0078_H
69–74	ATA-reserved	0000_H
75	Queue depth	$001F_H$
76	Serial ATA capabilities	$xxxx_H$
77	Reserved for future Serial ATA definition	$xxxx_H$
78	Serial ATA features supported	$xxxx_H$
79	Serial ATA features enabled	$xxxx_H$
80	Major version number	$003E_H$
81	Minor version number	0028_H
82	Command sets supported	$364B_H$
83	Command sets supported	$7C03_H$
84	Command sets support extension (see note following this table)	4003_H See Word 108-111 note. (4003H = 0100000000000011 binary)
85	Command sets enabled	$30xx_H$
86	Command sets enabled	0001_H
87	Command sets enable extension	4000_H
88	Ultra DMA support and current mode (see note following this table)	$xx3F_H$
89	Security erase time	0000_H

Word	Description	Value
90	Enhanced security erase time	0000_H
92	Master password revision code	$FFFE_H$
93	Hardware reset value	$xxxx_H$
94	Automatic acoustic management	8080_H
95–99	ATA-reserved	0000_H
100–103	Total number of user-addressable LBA sectors available (see Section 2.2 for related information). These words are required for drives that support the 48-bit addressing feature. Maximum value: 0000FFFFFFFFFFFFh.	ST1000DM003 = 1,953,525,168 ST500DM002 = 976,773,168
104–107	ATA-reserved	0000_H
108–111	The mandatory value of the world wide name (WWN) for the drive. **NOTE:** This field is valid if word 84, bit 8 is set to 1 indicating 64-bit WWN support.	Each drive will have a unique value.
112–127	ATA-reserved	0000_H
128	Security status	0001_H
129–159	Seagate-reserved	$xxxx_H$
160–254	ATA-reserved	0000_H
255	Integrity word	$xxA5_H$

Note	Advanced Power Management (APM) and Automatic Acoustic Management (AAM) features are not supported.

Note	See the bit descriptions below for words 63, 84, and 88 of the Identify Drive data.

Description (if bit is set to 1)		
	Bit	**Word 63**
	0	Multiword DMA mode 0 is supported.
	1	Multiword DMA mode 1 is supported.
	2	Multiword DMA mode 2 is supported.
	8	Multiword DMA mode 0 is currently active.
	9	Multiword DMA mode 1 is currently active.
	10	Multiword DMA mode 2 is currently active.
	Bit	**Word 84**
	0	SMART error login is supported.
	1	SMART self-test is supported.
	2	Media serial number is supported.
	3	Media Card Pass Through Command feature set is supported.
	4	Streaming feature set is supported.
	5	GPL feature set is supported.
	6	WRITE DMA FUA EXT and WRITE MULTIPLE FUA EXT commands are supported.
	7	WRITE DMA QUEUED FUA EXT command is supported.
	8	64-bit World Wide Name is supported.
	9-10	Obsolete.
	11-12	Reserved for TLC.
	13	Obsolete.
	14	Shall be set to 1.
	15	Shall be cleared to 0.
	Bit	**Word 88**
	0	Ultra DMA mode 0 is supported.
	1	Ultra DMA mode 1 is supported.
	2	Ultra DMA mode 2 is supported.
	3	Ultra DMA mode 3 is supported.
	4	Ultra DMA mode 4 is supported.
	5	Ultra DMA mode 5 is supported.
	6	Ultra DMA mode 6 is supported.
	8	Ultra DMA mode 0 is currently active.
	9	Ultra DMA mode 1 is currently active.
	10	Ultra DMA mode 2 is currently active.
	11	Ultra DMA mode 3 is currently active.
	12	Ultra DMA mode 4 is currently active.
	13	Ultra DMA mode 5 is currently active.
	14	Ultra DMA mode 6 is currently active.

4.3.2 Set Features command

This command controls the implementation of various features that the drive supports. When the drive receives this command, it sets BSY, checks the contents of the Features register, clears BSY and generates an interrupt. If the value in the register does not represent a feature that the drive supports, the command is aborted. Power-on default has the read look-ahead and write caching features enabled. The acceptable values for the Features register are defined as follows:

02_H	Enable write cache *(default)*.
03_H	Set transfer mode (based on value in Sector Count register). Sector Count register values:
	00_H Set PIO mode to default (PIO mode 2).
	01_H Set PIO mode to default and disable IORDY (PIO mode 2).
	08_H PIO mode 0
	09_H PIO mode 1
	$0A_H$ PIO mode 2
	$0B_H$ PIO mode 3
	$0C_H$ PIO mode 4 *(default)*
	20_H Multiword DMA mode 0
	21_H Multiword DMA mode 1
	22_H Multiword DMA mode 2
	40_H Ultra DMA mode 0
	41_H Ultra DMA mode 1
	42_H Ultra DMA mode 2
	43_H Ultra DMA mode 3
	44_H Ultra DMA mode 4
	45_H Ultra DMA mode 5
	46_H Ultra DMA mode 6
10_H	Enable use of SATA features
55_H	Disable read look-ahead (read cache) feature.
82_H	Disable write cache
90_H	Disable use of SATA features
AA_H	Enable read look-ahead (read cache) feature *(default)*.
$F1_H$	Report full capacity available

Note	At power-on, or after a hardware or software reset, the default values of the features are as indicated above.

4.3.3 S.M.A.R.T. commands

S.M.A.R.T. provides near-term failure prediction for disk drives. When S.M.A.R.T. is enabled, the drive monitors predetermined drive attributes that are susceptible to degradation over time. If self-monitoring determines that a failure is likely, S.M.A.R.T. makes a status report available to the host. Not all failures are predictable. S.M.A.R.T. predictability is limited to the attributes the drive can monitor. For more information on S.M.A.R.T. commands and implementation, see the *Draft ATA-5 Standard.*

SeaTools diagnostic software activates a built-in drive self-test (DST S.M.A.R.T. command for $D4_H$) that eliminates unnecessary drive returns. The diagnostic software ships with all new drives and is also available at: http://seatools.seagate.com.

This drive is shipped with S.M.A.R.T. features disabled. Users must have a recent BIOS or software package that supports S.M.A.R.T. to enable this feature. The table below shows the S.M.A.R.T. command codes that the drive uses.

Code in features register	S.M.A.R.T. command
$D0_H$	S.M.A.R.T. Read Data
$D2_H$	S.M.A.R.T. Enable/Disable Attribute Autosave
$D3_H$	S.M.A.R.T. Save Attribute Values
$D4_H$	S.M.A.R.T. Execute Off-line Immediate (runs DST)
$D5_H$	S.M.A.R.T. Read Log Sector
$D6_H$	S.M.A.R.T. Write Log Sector
$D8_H$	S.M.A.R.T. Enable Operations
$D9_H$	S.M.A.R.T. Disable Operations
DA_H	S.M.A.R.T. Return Status

Note	If an appropriate code is not written to the Features Register, the command is aborted and 0x04 (abort) is written to the Error register.

Seagate Technology LLC
AMERICAS Seagate Technology LLC 10200 South De Anza Boulevard, Cupertino, California 95014, United States, 408-658-1000
ASIA/PACIFIC Seagate Singapore International Headquarters Pte. Ltd. 7000 Ang Mo Kio Avenue 5, Singapore 569877, 65-6485-3888
EUROPE, MIDDLE EAST AND AFRICA Seagate Technology SAS 16-18 rue du Dôme, 92100 Boulogne-Billancourt, France, 33 1-4186 10 00

Publication Number: 100768625, *Rev. D*
May 2016