Space

Assembly Instructions

compulocks

1

FOLLOW STAND
MOUNTING INSTRUCTIONS

or

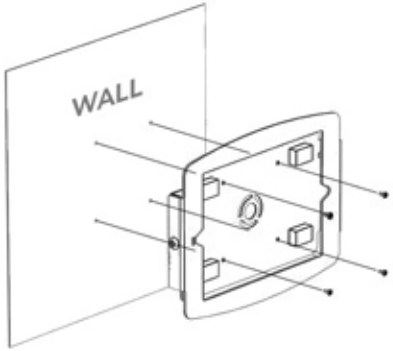

WALL MOUNTING SCREWS
NOT PROVIDED

2

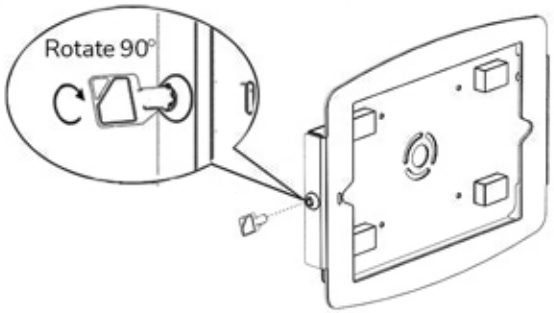

3

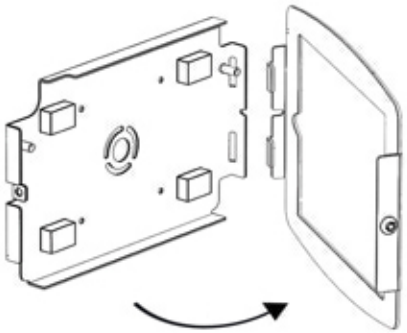

4

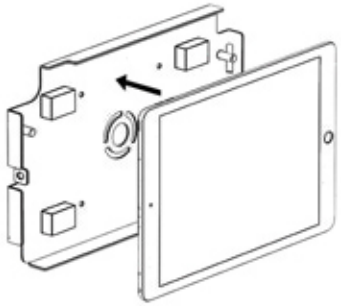

5

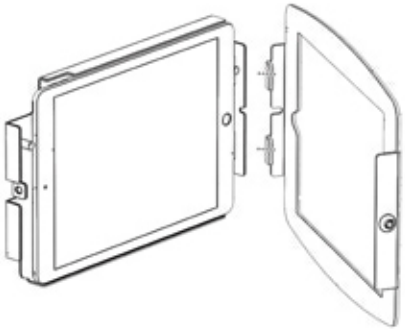

6

7

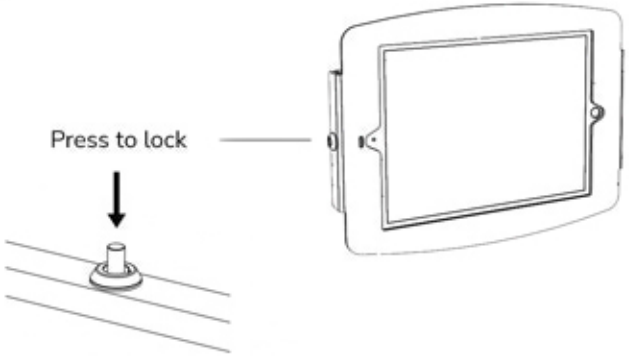

©Compulocks Brands Inc. All Rights Reserved.