BT7033

SMALL AV ACCESSORY SHELF INSTALLATION GUIDE & PARTS LIST

This Pack Contains 1 Shelf

PLEASE KEEP THIS FOR FUTURE REFERENCE

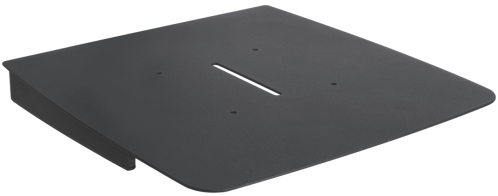

FEATURES

- **Shelf dimensions:** 300mm x 300mm
- **Max weight:** 25kg
- **Max weight:** 15kg when used with a single pole/column
- Can be mounted directly to a wall, a System X vertical column or poles (when used with B-Tech collars BT7052, BT7260 and BT7841 - *sold separately*)
- Mount on a single or double pole (use 1 collar for single poles, 2 collars for double poles)
- Can also be used on a back-to-back setup where a shelf is required on each side of the pole
- Ideal for mounting a VC camera - Fits most cameras with 1/4" thread. Also features 100 x 100mm fixing points

When used with
Single Poles/Columns

CONTENTS

Installation Safety Notes....2
Parts List....4
Installation Instructions....5
Typical Installations....6
Product Dimensions....7
B-Tech Contact Details....8

INSTALLATION TOOLS REQUIRED

Crosshead
screwdriver

B-TECH AUDIO VIDEO MOUNTS

www.btechavmounts.com

INSTALLATION SAFETY INSTRUCTIONS

CAUTION: This shelf is intended for use only with the maximum weights indicated. Use with AV equipment heavier than the maximum indicated may result in instability causing possible injury.

Do not attempt to install this product until all instructions and warnings have been read and properly understood. Please keep these instructions for future reference.
Please check carefully to make sure there are no missing or defective parts - defective parts must never be used.
B-Tech International Design & Manufacturing Ltd, its distributors and dealers are not liable or responsible for damage or injury caused by improper installation, improper use or failure to observe these safety instructions. In such cases, all guarantees will expire.

General

Great care must always be taken during installation as most AV equipment is of a fragile nature, possibly heavy and easily damaged if dropped.
If you do not fully understand the instructions or are not sure how to install this product safely, then please consult a professional for advice and/or to install this product for you. Failure to mount this product correctly may cause serious injury or death both during installation and at any time thereafter.
Do not mount any AV equipment that exceeds the specific weight limit of the product you are installing. This weight limit will be clearly stated on each product and its packaging and will vary from product to product.

Product location

Please pay careful attention to where this product is located. Some locations are not suitable for installation. For Indoor use only.
If located in a public or frequently populated area ensure that the product is out of the immediate reach of people.

Fixing hardware

It is highly recommended that all fixing screws be used where supplied and that the purpose of all other fixing hardware is fully understood. In some cases more AV equipment fixing hardware will be supplied to accommodate different models of equipment and set up configurations.
The installer must be satisfied that any supplied fixing hardware is suitable for each specific installation. If any fixing screws or included hardware are deemed not sufficient for a safe installation then please consult a professional or your local hardware store.

Hazard limitation

When routing cables take advantage of any built in cable management features that the product might provide and ensure that all cables are tidy and secure. Check to see that any moving aspect of the product can do so unhindered by any cabling.
Some products have moving parts and the potential to cause injury through the crushing or trapping of fingers or other body parts.
Particular attention to the nature of moving parts is required especially when assembling installing and adjusting during set up.
Immediately after installations double-check that the work done is safe and secure. Double-check all necessary fixings are present and are of ample tightness.
It is recommended that periodic inspections of the product and its fixing points are made as frequently as possible to ensure that safety is maintained. If in doubt consult a professional AV installer or other suitably qualified person.

CS

Společnost B-Tech International Design And Manufacturing Ltd. doporučuje provést instalaci tohoto produktu instalátora AV či jinak způsobilé osoby. Společnost B-Tech International Design And Manufacturing Ltd, její distributoři a prodejci nenesou prostřednictvím odborného odpov ědnost za škody nebo zranění způsobená nevhodnou instalací. Tento výrobek je nutno umístit do vhodné konstrukce a používat jen po uvedenou maximální výšku.

DE

B-Tech International Design And Manufacturing Ltd. empfiehlt, dass dieses Produkt durch einen qualifizierten AV-Techniker oder eine andere Person mit geeigneter Qualifikation installiert wird. B-Tech International Design And Manufacturing Ltd, ihre Distributoren und Händler können nicht für durch fehlerhafte Montage verursachte Beschädigung oder Verletzung haftbar bzw. verantwortlich gemacht werden. Dieses Produkt muss auf eine geeignetem Untergrund montiert werden und darf nur bis zum angegebenen Höchstgewicht verwendet werden.

ES

B-Tech International Design And Manufacturing Ltd. recomienda que un instalador de audio y video profesional u otra persona debidamente cualificada instalen este producto. B-Tech International Design And Manufacturing Ltd, sus distribuidores y concesionarios no se hacen cargo ni se responsabilizan de ningún daño o lesión provocados por una instalación inapropiada. Este producto se debe montar en una estructura adecuada y se debe utilizar soportando solamente hasta el peso máximo indicado.

FR

B-Tech International Design And Manufacturing Ltd. recommande de confier l'installation de ce produit à un installateur AV professionnel ou à une autre personne dûment qualifiée. B-Tech International Design And Manufacturing Ltd, ses distributeurs et ses revendeurs ne sauraient être tenus responsables de tout dégât ou de toute blessure résultant d'une installation incorrecte. Ce produit doit être monté sur un support approprié et utilisé dans la limite du poids maximum indiqué.

IT

B-Tech International Design And Manufacturing Ltd. consiglia di affidare l'installazione di questo prodotto a un installatore specializzato o ad altra persona adeguatamente qualificata. B-Tech International Design And Manufacturing Ltd. i suoi distributori e rivenditori non accettano alcuna responsabilità nei riguardi di eventuali danni o infortuni causati da un'errata installazione. Questo prodotto deve essere fissato a una struttura idonea e utilizzato unicamente sino al peso massimo indicato.

NL

B-Tech International Design And Manufacturing Ltd. adviseert om dit product te laten installeren door een professionele AV-installateur of andere hiervoor gekwalificeerde persoon. B-Tech International Design And Manufacturing Ltd, haar distributeurs en dealers zijn niet aansprakelijk of verantwoordelijk voor schade of letsel die is veroorzaakt door onoordeelkundige installatie. Dit product moet worden gemonteerd aan een geschikte constructie, waarbij het aangegeven maximum gewicht niet mag worden overschreden.

PL

Firma B-Tech International Design And Manufacturing Ltd. zaleca, aby ten produkt był instalowany przez profesjonalnych instalatorów AV lub inny odpowiednio przeszkolony personel. Firma B-Tech International Design And Manufacturing Ltd, jej dystrybutorzy i dealerzy nie ponoszą odpowiedzialności za uszkodzenia lub obrażenia ciała powstałe w wyniku nieprawidowej instalacji. Niniejszy produkt musi być zamontowany na odpowiedniej powierzchni, a podczas u żytkowania nie wolno przekraczać podanego maksymalnego obciążenia.

PT

A B-Tech International Design And Manufacturing Ltd. recomenda que a instalação deste produto seja efectuada por um instalador de AV instalador de AV profissional ou outra pessoa devidamente habilitada. A B-Tech International Design And Manufacturing Ltd. e os seus distribuidores e concessionários não são responsáveis por danos ou lesões causados por uma instalação incorrecta. Este produto tem de ser montado numa estrutura adequada e utilizado somente até ao peso máximo indicado.

RU

Компания B-Tech International Design And Manufacturing Ltd. рекомендует, чтобы установка данного изделия производилась инженером по установке аудио-видеотехники или другим специалистом с соответствующей квалификацией. Компания B-Tech International Design And Manufacturing Ltd. ее дистрибьюторы и дилеры не несут ответственности за повреждения или травмы, полученные в результате неправильной установки. Данное изделие должно

توصي بي- تك للتجارة الدولية المحدودة بأن شخص محترف فى تركيب ال AV او شخص مؤهل تأهيلا مناسبا لتركيب هذا المنتج. بي- تك للتجارة الدولية، موزعيها والتجار ليست عرضة أو مسؤولة عن الأضرار أو الإصابات الناجمة عن تركيب غير سليم، والاستخدام غير السليم أو عدم مراعاة هذه التعليمات للسلامة. يجب أن يتم تركيب هذا المنتج فى بنية مناسبة ويجب استخدامة فقط لدعم الحد الأقصى للوزن المشار إليه.

BT7033
PARTS LIST

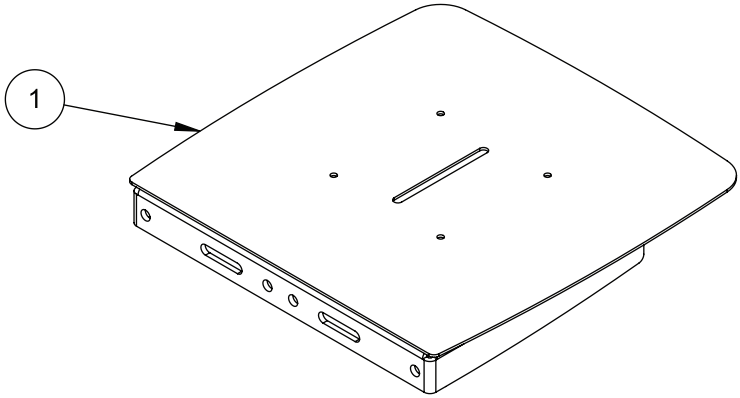

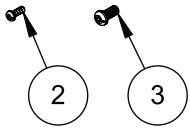

REF.	PART NAME	QTY
1	ACCESSORY SHELF	1
2	M4 x 10mm SCREW	4
3	UNC 1/4" x 1/2" SCREW	1

Suitable for loads up to 7.5kg using 1 accessory collar

Suitable for loads up to 15kg using 2 accessory collars

Wall Mounting

Fix shelf to wall.

Use outer fixings holes when wall mounting

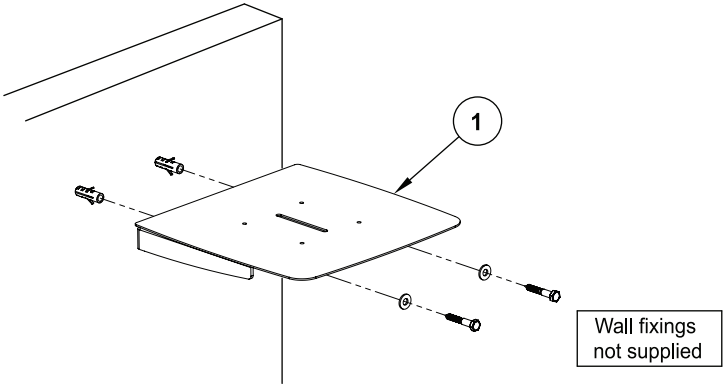

Pole Mounting

i. Attach shelf to collar(s) using the M8 screws and spring washers that are supplied with the collars.

Single pole Mounting

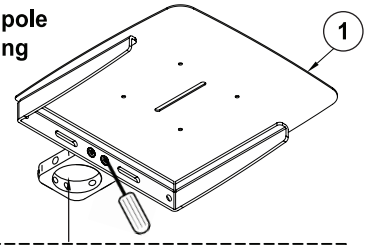

Double pole Mounting

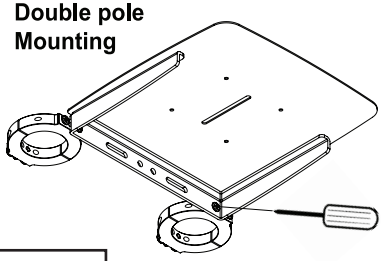

Ø50mm collars
BT7052 / BT7841 *(sold separately)*

Ø60mm collars
BT4041 / BT7260 *(sold separately)*

ii. Slide shelf over the poles, secure collars.

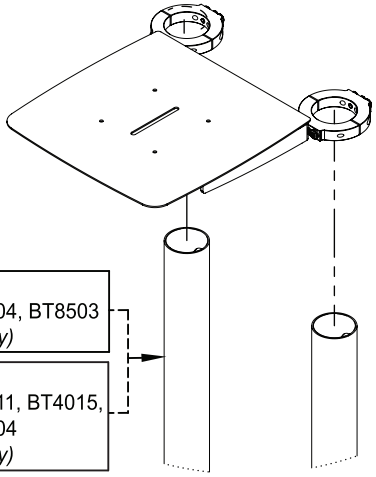

Ø50mm Poles
BT7850, BT7504, BT8503
(sold separately)

Ø60mm Poles
BT4005, BT4011, BT4015,
BT4020, BT8504
(sold separately)

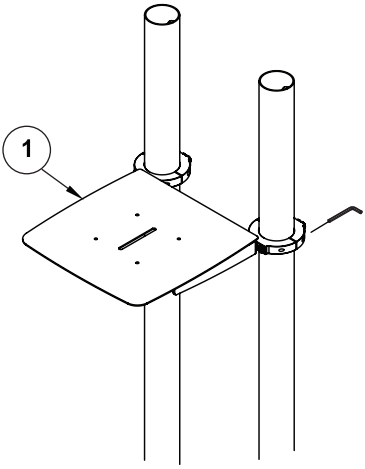

TYPICAL INSTALLATIONS

Single pole installation

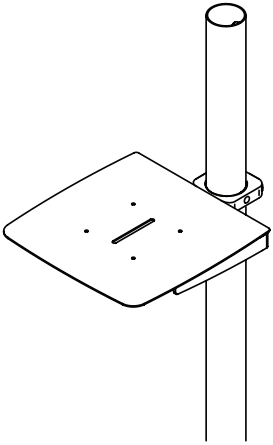

Back to back on double poles

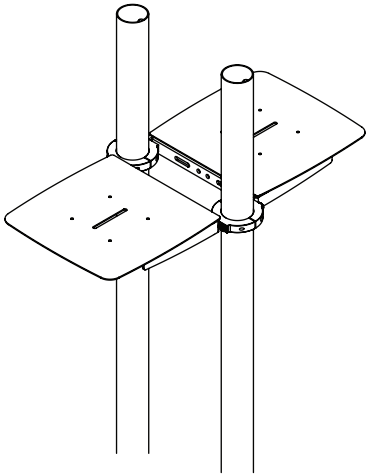

BT8380 Vertical Column Installation

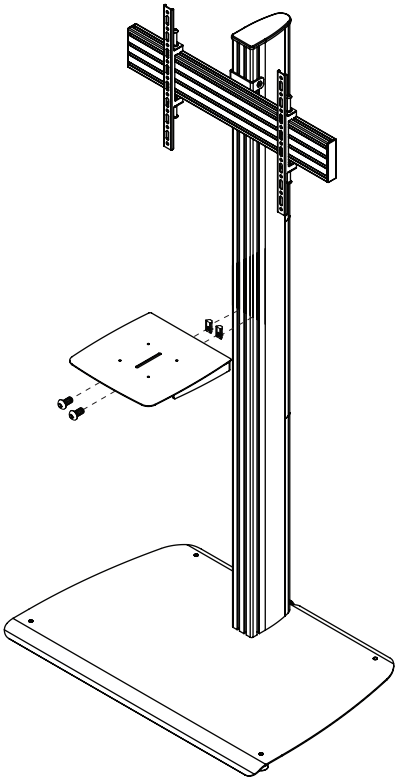

VC Camera Installation

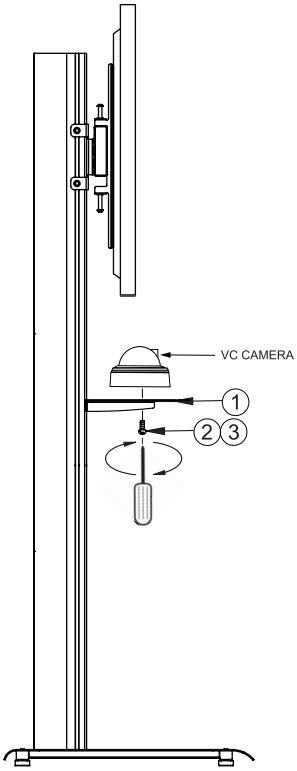

BT7033
PRODUCT DIMENSIONS

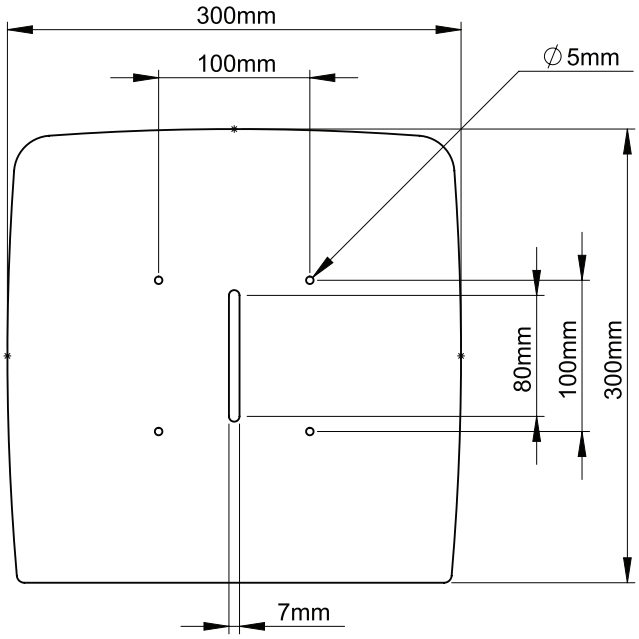

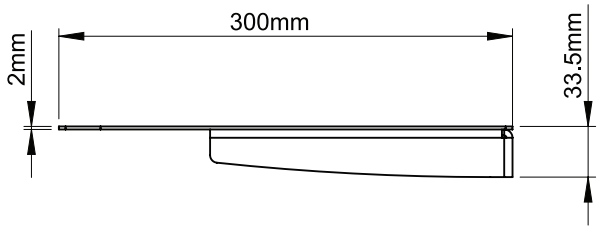

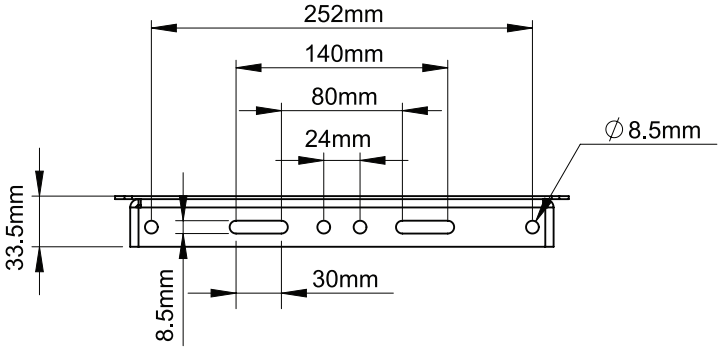

THESE INSTRUCTIONS ARE INTENDED AS A GUIDE ONLY AND B-TECH ACCEPTS NO LIABILITY FOR THE ACCURACY OF THE INFORMATION CONTAINED IN THIS DOCUMENT.

www.btechavmounts.com

B-TECH AUDIO VIDEO MOUNTS

HEAD OFFICE
B-Tech International Limited
Bennett House, Long March, Daventry, Northants., NN11 4NR, UK
Email: info@btechavmounts.com

©2017 B-Tech International Design and Manufacturing Limited. All rights reserved.
B-Tech Audio Video Mounts is a division of B-Tech International Design and Manufacturing Limited.
B-Tech, Better By Design & System X are registered trademarks of B-Tech International Design and Manufacturing Limited.
All other brands and product names are trademarks of their respective owners.
Photographs are for illustrative purposes only. E&OE.

AMA-BT7033-V1-0917-110 Made in Vietnam