ATEN PSD PP v4.0
Secure KVM Switch Series

2/4/8-Port USB DVI / HDMI / DisplayPort Single / Dual Display Secure KVM Switch Quick Start Guide

© Copyright 2021 ATEN® International Co. Ltd.
ATEN and the ATEN logo are registered trademarks of ATEN International Co., Ltd.
All rights reserved. All other trademarks are the property of their respective owners.

Part No. PAPE-1223-L33G Released: 12/2021

A Hardware Overview

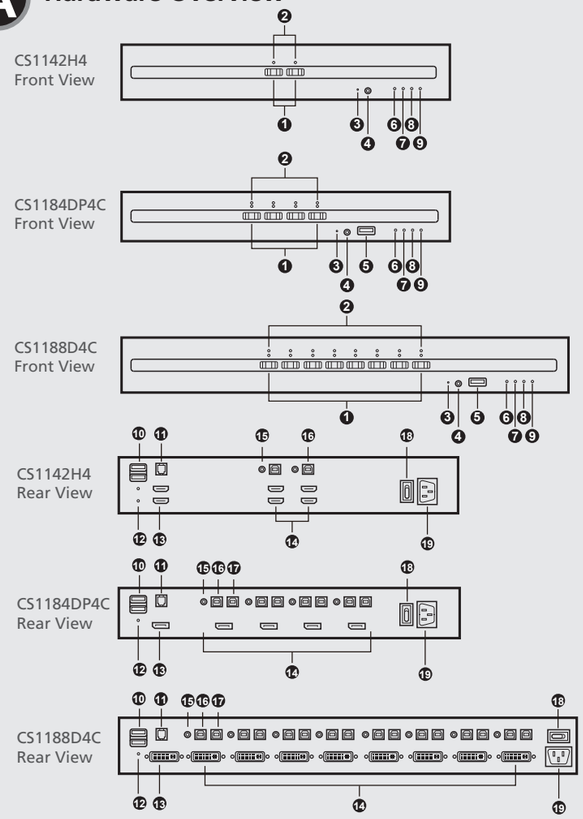

B Installation

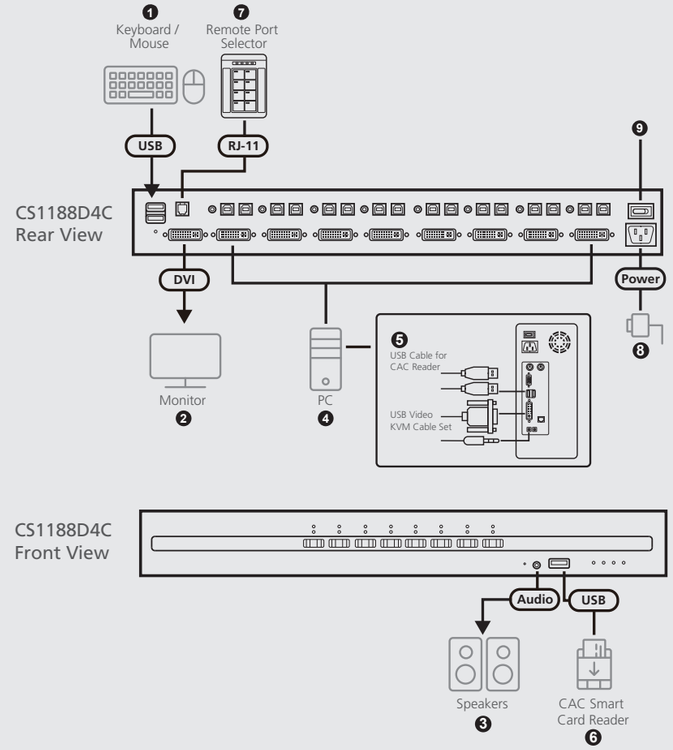

Package Contents

1 Secure KVM Switch
1 power cord
1 user instructions

Support and Documentation Notice
All information, documentation, firmware, software utilities, and specifications contained in this package are subject to change without prior notification by the manufacturer.
To reduce the environmental impact of our products, ATEN documentation and software can be found online at **http://www.aten.com/download/**

Technical Support
www.aten.com/support

Scan for more information

ATEN Website | User Manual

The terms HDMI, HDMI High-Definition Multimedia Interface, and the HDMI Logo are trademarks or registered trademarks of HDMI Licensing Administrator, Inc.

This QSG covers the following ATEN Secure KVM Switches:

Model Type	Console / Computer Video Interface	CAC Support	2-Port		4-Port		8-Port	
			Single Head	Dual Head	Single Head	Dual Head	Single Head	Dual Head
Display Port	Display Port	V	CS1182DP4C	CS1142DP4C	CS1184DP4C	CS1144DP4C	CS1188DP4C	CS1148DP4C
		X	CS1182DP4	CS1142DP4	CS1184DP4	CS1144DP4	CS1188DP4	CS1148DP4
HDMI	HDMI	V	CS1182H4C	CS1142H4C	CS1184H4C	CS1144H4C	N/A	N/A
		X	CS1182H4	CS1142H4	CS1184H4	CS1144H4	N/A	N/A
DVI	DVI	V	CS1182D4C	CS1142D4C	CS1184D4C	CS1144D4C	CS1188D4C	CS1148D4C
		X	CS1182D4	CS1142D4	CS1184D4	CS1144D4	CS1188D4	CS1148D4

Note: The CAC stands for Common Access Card, which is commonly used as a standard identification.

ATTENTION

If the tamper-evident seal is missing or peeled, avoid using the product and contact your ATEN dealer.

If all front panel LEDs on the Secure KVM Switch (except Power) flash continuously, all Remote Port Selector (RPS) LEDs flash, or either enclosure appears breached, avoid using the product and contact your ATEN dealer.

The Secure KVM Switch and the Remote Port Selector (RPS) are equipped with active always-on chassis intrusion detection security. Any attempt to open the enclosure will permanently disable the switch / RPS, and void the warranty.

A Hardware Overview

1. port selection pushbuttons
2. port LEDs / port and CAC LEDs
3. reset button
4. console audio jack
5. console USB smart card / CAC reader port (CAC models only)
6. Num Lock LED
7. Caps Lock LED
8. Scroll Lock LED
9. power LED
10. console USB ports (keyboard / mouse)
11. remote port selector port
12. video LED(s)
13. console monitor port(s)
14. KVM ports section
15. KVM audio jack
16. KVM USB port
17. KVM USB smart card / CAC reader port
18. power switch
19. power socket

Note: This Quick Start Guide uses CS1188D4C, CS1142H4, and CS1184DP4C to illustrate different interfaces (DVI / HDMI / DisplayPort), port numbers (2/4/8-Port), number of displays (single / dual), and the CAC function (yes / no).

B Installation

1. Connect your USB keyboard and mouse to the console USB ports located on the unit's rear panel.
   Note: For security purposes, please do not connect a wireless keyboard / mouse to the switch. The console USB keyboard / mouse ports are only compatible with standard USB keyboard and mouse.
2. Connect your monitor(s) to the console monitor port(s) located on the unit's rear panel and power on the monitor(s).
   Note: Due to the security policy, the ATEN Secure KVM Switch does not support a monitor hot-swap. If you would like to change the console monitor, you must first power off the entire installation.
3. Connect your speakers to the console audio jack located on the unit's front panel.
4. For a single-display Secure KVM Switch, use the KVM cable set to connect the video connector into any available video port in the KVM ports section of the switch, and then connect the accompanying USB (keyboard / mouse / CAC) and speaker connectors into their corresponding ports.
   For a dual-display Secure KVM Switch, use the KVM cable set to connect the video connector into any available video port A (primary) in the KVM ports section of the switch. Use another video cable to connect the video connector into the video port B on the same KVM ports section of the switch, and then connect the accompanying USB (keyboard / mouse / CAC) and speaker connectors into their corresponding ports.
   Note:
   • Verify that all the plugs are in the same KVM port (all in port 1, all in port 2, etc.). Each port is marked with an appropriate icon to identify which cable should be connected.
   • The KVM cable set and the extra video cable are not included in the package, they are available with a separate purchase. Please contact your ATEN dealer for more information.
5. At the other end of the KVM cable set, connect the USB, video, and speaker cables into their respective ports on the computer. For a dual-display Secure KVM Switch, connect the other end of the video connector on the second video cable into its respective port on the computer. Repeat steps 4 and 5 for each computer you are installing.
6. (Optional) Connect the USB smart card / CAC reader to the console USB smart card / CAC reader port located on the front panel.
   Note: Only qualified USB authentication devices (e.g., smart card and CAC readers by default) can be plugged into this port.
7. (Optional) Connect the remote port selector to the remote port selector port located on the rear panel.
   Note:
   • The remote port selector is not included in the package, it is available with a separate purchase. Please contact your ATEN dealer for more information.
   • Make sure to connect the remote port selector before powering on the ATEN Secure KVM Switch. Connecting the remote port selector after the ATEN Secure KVM Switch is powered on will not be detected by the switch.
8. Plug the power cord to the power socket, and plug the other end into an AC power source.
9. Turn on the power switch and check that the LEDs light up. The ATEN Secure KVM Switch will start a security self-test at each power cycle.

Operation

Manual Switching

For enhanced security purposes, the ATEN Secure KVM Switch only offers manual port switching. This is to be achieved by pressing the port selection pushbuttons located on the unit's front panel or pressing the remote port selector's pushbuttons (if the remote port selector is connected and aligned). Press and release a port selection pushbutton to bring the KVM focus to the computer attached to its corresponding port. The selected port LED lights bright orange (on the switch and/or the remote port selector) to indicate that the computer attached to its corresponding port has the KVM focus. To meet the maximum security and channel isolation requirements, the keyboard, mouse, video, audio, and USB CAC reader will be switched together.

Chassis Intrusion Detection

To help prevent malicious tampering with the ATEN Secure KVM Switch, the switch (or the RPS) becomes inoperable and all front panel LEDs on the Secure KVM Switch (except Power) or all Remote Port Selector (RPS) LEDs flash constantly when a chassis intrusion (such as the cover being removed) is detected (by the switch or by the RPS).
The intrusion detection protection is an always-on function. If all front panel LEDs on the Secure KVM Switch (except Power) flash continuously, all Remote Port Selector (RPS) LEDs flash, or either enclosure appears breached, avoid using the product and contact your ATEN dealer.